Overview of contents

	Register
Safety instructions	1
Short description	2
Operating instructions	3
Basic unit	
Options	
Accessories	4
Technical data	5
Basic unit	
Options	
Installation and start-up/options	6
Functional test/Adjustment/Test instruments	7
Error detection instructions	8
Spare parts list	9
Description of circuits	10
Circuit diagrams/Oscillograms	11
Other	12

Professional Video Generator VG 1100

SAFETY INSTRUCTIONS

GRUNDIG
electronic

Safety instructions

1. Regular inspection

The equipment should be inspected every six months to VBG 4 or VDE 0411 Part 1.

2. Inspection after corrective maintenance

DIN regulations VDE 0701 should be adhered to when servicing:

2.1 Visual check

- Mains cable
- Fusing (Value, switch-off characteristic)
- Voltage supply selector
- Insulation
- Cables
- Nameplates

2.2 Insulation resistance

2.3 Leakage current

2.4 Functional test

Note: The points mentioned only serve as guidelines and do not exempt the user from adhering to DIN VDE 0701.

3. Interference suppression measures

Please ensure that the following metallic parts of the device are bright prior to assembly:

- Front panel under the contact springs, in the support area of the front aperture and at the rear in the area of the fixing holes
- Housing shells in the support area of the contact springs to the front panel and on the inside in the area of the fixing holes
- Front aperture at the rear
  The front aperture must have copper RF sealing strips on all 4 sides.

Please ensure that all the fixing elements are correctly positioned on assembly.

4. Safety instructions for measuring

⚠ The measuring earth is connected to the housing.

Special care must be taken with degree of protection II devices when the measuring setup is such that the earth connection of the input connector is applied to voltage potential. The following dangers exist:

- Touching uninsulated connectors or the housing is equivalent to touching voltage conducting parts.
- The voltage difference between the unit earth and the primary winding of the mains transformer can be so great that the transformer insulation is damaged.
  This danger exists when voltages of a higher frequency (>100 Hz) are superimposed on high voltage and/or when the measuring procedure takes a long time.
  Mains voltage may be present on the housing in the case of damaged transformer insulation.

⚠ If live measuring earth is used for measuring, please note the following:

- Only qualified personnel may conduct measuring.
- Mark the measuring setup clearly.
- Safeguard the measuring setup against inadvertent contact.
- The potential of the measuring earth may not exceed 50 V.

5. Component instructions

5.1 Safety components

- Use components to IEC or VDE guidelines.
- Only use replacement parts with the same specifications.

5.2 MOS components

- Please observe the protective measures for handling MOS components.

Handling MOS components

MOS circuits demand special care as regards static charging.
Static charges can occur in all highly insulated synthetics and can be passed on to a person wearing clothes or shoes made of synthetic materials.
Protective structures at the inputs and outputs of the MOS circuits only provide limited safety because of their response time.
Please observe the following guidelines for protecting components against damage:

1. MOS circuits should remain in conductive packaging until they are required.
   Never store or transport MOS components in expanded polystyrene or plastic rails.
2. Personnel should touch an earthed object before touching MOS components so as to be discharged.
3. Only the housing of MOS components may be touched, not the connections.
4. Inspection and work may only be carried out on earthed devices.
5. Do not release or contact MOS ICs in plug-in sockets when operating voltage is present.
6. No positive voltages (relative to substrate connection) may arrive at the circuit in the case of P channel MOS components.

Soldering regulations for MOS circuits:

- Only use low-voltage soldering bits which are disconnected from the mains.
- The maximum soldering time is 5 seconds at a soldering bit temperature of 300°C to 400°C.

Professional Video Generator VG 1100

INTRODUCTION

GRUNDIG
electronic

Introduction

The video generator generates the FuBK test pattern in accordance with the guidelines of the broadcasting authorities. It contains the requisite ITSs to the CCIR norm. The following test patterns are also implemented: VTR, multiburst, various color bars, positive or negative sawtooth, grey scale, convergence crosshatch, centring, as well as a special black and white monitor test pattern. All the colors contained in the color bars may be generated as a single color raster pattern. The circle and the color signal may be switched on or off in each test pattern as desired. The modular concept of the VG 1100 allows each customer to determine how the device should be configured. The test patterns generated by software may also be exchanged or retrofitted.

Design

- Modular design of video generator

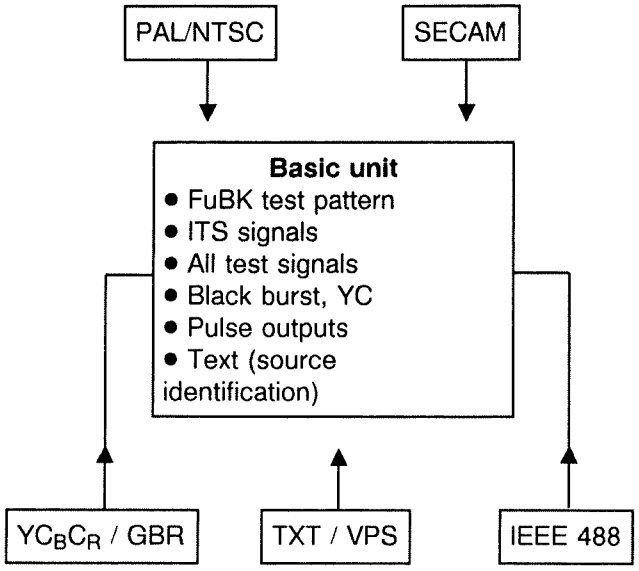

Order no.:	Model:
Basic units :	
GUE 71-00	VG 1100 basic unit incl. text and ext. sync. (only with options)
GUE 72-00	VG 1100 PAL/NTSC generator incl. text and ext. sync.
Options :	
GUE 70-01	PAL/NTSC (Module for GUE 71-00 basic unit)
GUE 70-03	SECAM
GUE 70-04	YC_BC_R components
GUE 70-05	Teletext and VPS
GUE 70-06	IEEE 488
GUE 70-07	GBR output (only with GUE 70-04)

- Numerous device variants
  - CVBS generator for PAL, NTSC and SECAM
  - Components generator with YC_BC_R and GBR
  - CVBS generator and components generator in one unit
- "Text fade-in" (source ID)
  Text input either via an external ASCII keyboard or directly via the VG 1100 operator panel.
  You may select three different text sizes and the position in the test pattern. They may be faded into any test pattern and are retained after Power Off.
- Real time clock
- External synchronization
  Display for H-Lock and Sc-Lock
- Teletext and VPS signals
- Remote control via the IEC 625 (IEEE 488) interface
- User-friendly operation: menu-assisted user guidance in a two-line LCD display with 2 x 40 characters
  Easy selection of main functions via keys, subordinate menus via softkeys
- Configuration menu for pulse outputs, ITSs, H and Sc phase, text fade-in, clock and for the VPS inspection signals and teletext

Test patterns and signals

- Original FuBK test pattern
- ITS signals to CCIR
  - Full field ITSs
  - Various multiburst signals up to 20 MHz
  - Sweep over line and pattern with frequency markers
  - Various sawtooth test signals (pos., neg., with and without superimposed color subcarrier)
  - Various standard color bars
  - 50 Hz, 250 kHz square
  - Various crosshatches, 19 x 14, 19 x 15
  - Grey scale with various steps e.g. 5, 7, 10, 15 steps
  - special monitor inspection signals
- Flexible test pattern generation using software allows for test pattern generation tailored to the customer's requirements
- Variable Sc to H phase via configuration menu
- Signals to CCIR 473-4 and 624-3
- Special test signals for component technology

Output signals

- Three separate 75 Ω outputs for CVBS signals
- Separate amplitude attenuators for CVBS, CVB, VB, synchronous pulse, burst, chroma, chroma and burst, multiburst in ITS, multiburst test pattern
- Three separate black burst signals parallel to all test signals
- Y/C output for S-VHS
- Outputs for synchronous, horizontal, vertical and blanking signals, P and K pulse output, color subcarrier output
  Polarity and voltage position of the signals may be changed using software
- 500 Hz and 1 kHz sound output
- YC_BC_R output
- GBR output

The present manual applies to the PAL/NTSC model and software version 5.xx. Should you order new options or software, the supplementary documentation will be duly supplied.

Professional Video Generator VG 1100

OPERATING INSTRUCTIONS

Basic Unit

PAL / NTSC

GRUNDIG
electronic

Front view

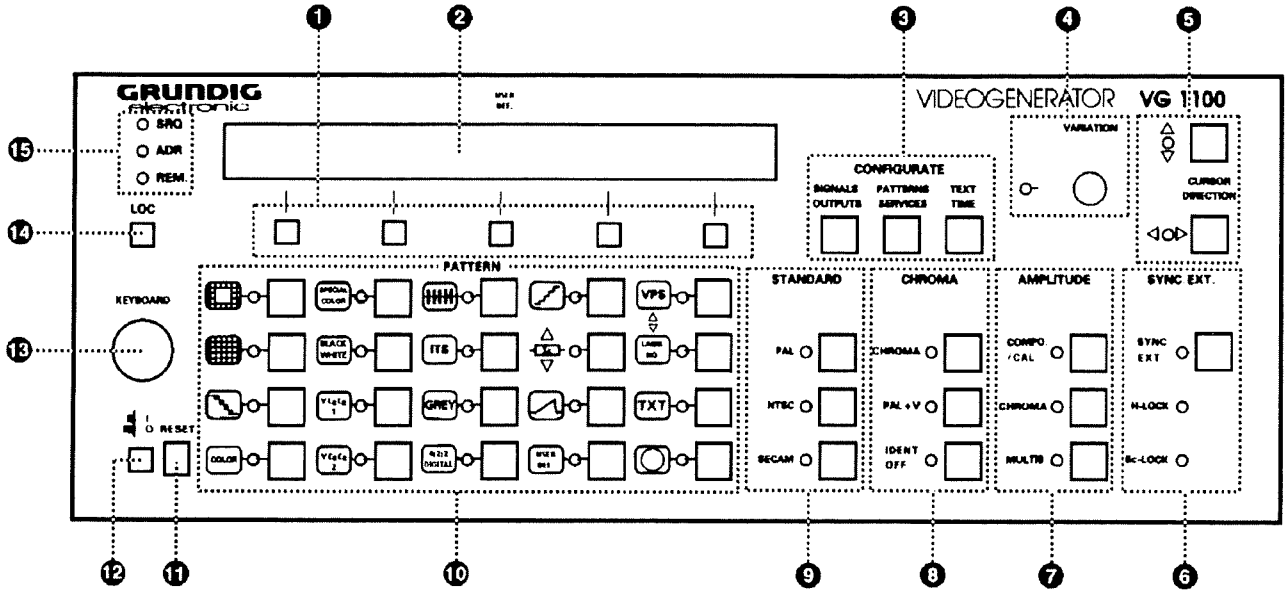

Rear view

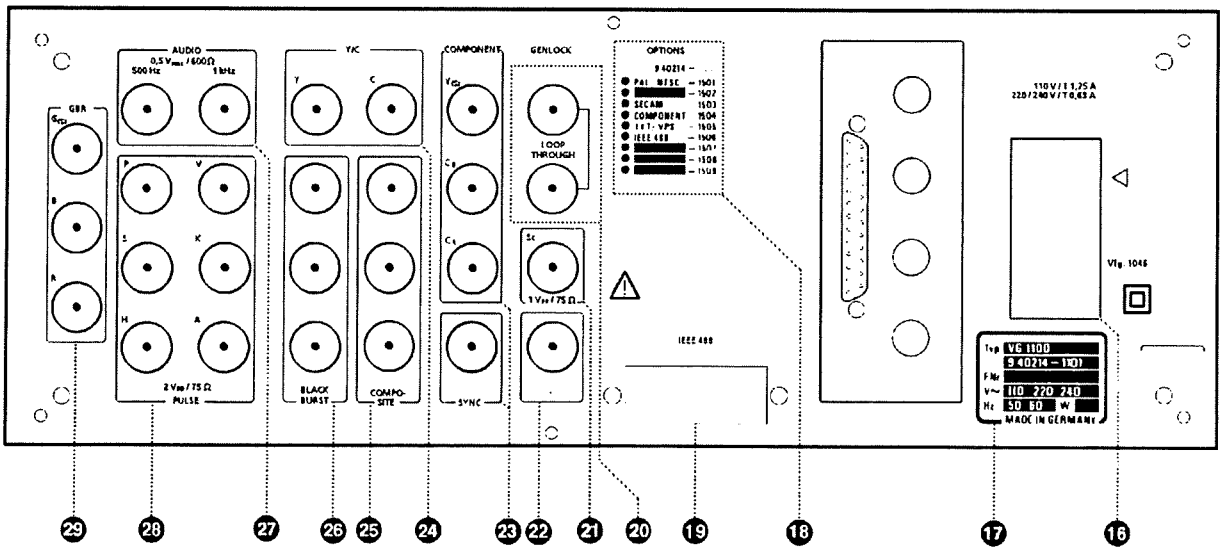

The figures entered below in () correspond to the item numbers shown in the illustrations on Page 3.

At a glance

Front view:

1 Softkeys for selecting subfunctions

2 Display, indicates status in line 1 and current softkey assignment in line 2

3 **CONFIGURATE** keys for selecting different configuration menus

4 **VARIATION** control, rotary switch for varying amplitude, cursor position etc.

5 Cursor direction switch for positioning text or clock

6 Switches to Sync. Ext. with status LEDs

7 Selects different attenuation menus

8 On/off switches for color, PAL and SECAM identification

9 Standard selector switches

10 Test pattern selection keys (self-cancelling) Subfunctions are selected via softkeys (1)

11 RESET button, resets the software to the basic state

12 On/off switch (mains)

13 Connector for ASCII keyboard (for text fade-in)

14 Switches from remote-controlled operation to manual

15 Status LEDs for IEEE 488 bus operation

Rear view:

16 Mains connector, mains voltage selector, fuse

17 Nameplate

18 Table of options fitted

19 IEEE 488 bus output

20 Sync. Ext. (through-looped input)

21 Sc output (color subcarrier)

22 Not used

23 Outputs for: luminance, blue color difference signal, red color difference signal, sync. pulse (only if options fitted)

24 Y/C output (S-VHS)

25 3 composite outputs (CVBS)

26 3 black burst outputs

27 Audio outputs

28 Pulse outputs

29 GBR outputs (only if option fitted)

Table of Contents - Basic Unit

1. General
1.1 Switching on/off (12)
1.2 Reset (11)
1.3 Remote control switch-off (IEEE 488) (14)
2. Configuring the VG 1100
2.1 Internal/external synchronization
(SYNC. EXT. operator panel (6))
2.2 Standard selection (STANDARD operator panel) (9)
2.2.1 PAL
2.2.2 NTSC
2.2.3 SECAM
2.3 Test pattern selection (PATTERN operator panel (10))
2.3.1 Test pattern selection
2.3.2 Color carrier superimposition (Sc key)
2.3.3 Circle fade-in (Circle key)
2.3.4 Test pattern selection for options
2.4 Chroma (CHROMA operator panel (8))
2.4.1 Chrominance content (CHROMA key)
2.4.2 PAL selector switch (PAL + V key)
2.4.3 Secam identification (IDENT OFF key)
2.5 Amplitude setting
(AMPLITUDE operator panel (7))
2.5.1 CVBS signal (COMP./CAL key)
2.5.2 Chroma signal (CHROMA key)
2.5.3 Multiburst signal (MULTIB key)
2.6 Configuring the device
(CONFIGURATE operator panel (3))
2.6.1 Configuring the test patterns
(SIGNALS/OUTPUTS key)
2.6.1.1 Color carrier selector switch
2.6.1.2 ITS fade-in
2.6.1.3 Sc to H phase shift
2.6.1.4 Multiburst markers
2.6.2 Configuring the TXT/VPS
(PATTERNS/SERVICES key)
2.6.3 Configuring the clock and the text
(TEXT/TIME key)
2.6.3.1 Configuring the text
2.6.3.2 Configuring the clock
2.6.3.3 Language selector switch/Software version no.
3. Configuring the pulse outputs
4. Glossary
5. Appendix
5.1 Test patterns and additional functions
5.2 Sc-H phase position
5.3 PAL 8V sequence
5.4 Pulse outputs
6. Options

1. General

The operating elements of the VG 1100 are located on the front panel. These include the **Mains switch (12)**, the **Reset switch (11)**, the **LOC switch (14)**, the **VARIATION** control rotary switch **(4)** and the **CURSOR DIRECTION (5)** keys. The other keys are located on the following operator panels: **PATTERN (10)**, **STANDARD (9)**, **CHROMA (8)**, **AMPLITUDE (7)**, **SYNC. EXT. (6)** and **CONFIGURATE (3)**. The operator panel keys only represent general categories; other options can be selected using the two-line **LCDs (2)** and the appropriate **Softkeys (1)**. Information about the current status appears on the left side of the LCD, while the right side displays the values entered under variation control. The second line displays the options which can be selected with the relevant softkeys. These options are different depending on the key operated, which means that a multitude of test patterns, standards etc. are possible. Only some of the possible settings are described here. A comprehensive list may be found in the table Test Pattern and Additional Functions. An external keyboard may be connected at the **KEYBOARD (13)** socket.

The following BNC sockets are located on the rear panel:

- Composite (3 × parallel). The output signals are in line with recommendation 624-3 of the CCIR.
- Black burst (3 × parallel)
- Y (Luminance content of Y/C signal)
- C (Chrominance content of Y/C signal)
- Sc (Color subcarrier)
- Pulses (Sockets for P, V, S, K, H and A signals)
- Audio (Sockets for 500 Hz and 1 kHz). The audio sockets may also be used for the pulses V25, V8, Frame, A(H), H/2 or H/4 by retrofitting and with the help of wire jumpers.
- Sync. Ext. (Input and loop-through for GenLock operation

1.1 Switching on and off

The **Mains switch (12)** is used to switch the VG 1100 on and off. When the test pattern is being generated (computing components), the LCD (2) displays "Test pattern being generated". The selected test pattern is only valid after this message has disappeared - in the case of complex test patterns after ca. 30 seconds. When the device is switched on, it is in the state which was configured before last switching off. This is possible due to the battery-operated RAM in the device (life-span of ca. 10 years).

1.2 RESET

Operating the **RESET** key **(11)** returns the VG 1100 to a defined default state. All the previously defined settings are lost. The reset key must also be operated after each software change. After reset the device has the following presettings:

- Internal synchronization
- Pal B/G standard
- Chroma On
- Calibrated amplitude
- FuBK test pattern
- ITSs 17, 18, 330 and 331
- Pulse outputs 0 ->negative

1.3 Remote control switch (IEEE 488) (LOCAL (14) key)

The **LOC.(14)** key and the LEDs **REM.**, **ADR.**, and **SQR.** only function in conjunction with the **IEEE 488** option. This option allows the VG 1100 to be operated under remote control. The **REM.** LED displays the remote control status and the **ADR.** LED the addressed status. The **SQR.** LED indicates a computer request. Operating the **LOC.** key terminates remote control and the VG 1100 can be operated via the keys on the front panel once more.

Refer to the Operating Instructions for **Option IEEE 488** for a detailed description.

2. Configuring the VG 1100

The VG 1100 offers a range of options regarding int./ext. synchronization, standards, test patterns, chroma handling, amplitude variation and other settings. This means that an extensive configuration of the device is necessary. It takes place in the following sequence:

- **SYNC.EXT. (6)** operator panel :
  Internal synchronization or GENLOCK operation.
- **STANDARD (9)** operator panel :
  Norm PAL, NTSC oder SECAM.
- **PATTERN (10)** operator panel :
  Desired test pattern.
- **CHROMA (8)** operator panel :
  Chroma On/Off
- **AMPLITUDE (7)** operator panel :
  Desired output level.
- **CONFIGURATE (3)** operator panel :
  Additional settings for certain test patterns.

Not all panels must be operated on every change of test pattern. If the VG 1100 is already configured for a particular standard, output amplitude etc., that particular key need not be operated again. Generally the keys for a test pattern change (**PATTERN** operator panel) are operated more frequently than the other keys.

2.1 Internal-external synchronization (SYNC.EXT. (6) operator panel)

If the **SYNC.EXT.** key has not been operated - the **SYNC.EXT.**, **H-LOCK**, and **Sc-LOCK** are not lit - the VG 1100 functions as a "stand-alone unit", i.e. with an internal clock generator. The VG 1100 clock meets the standard PAL requirements of Technical Specification 8/3.1 of the broadcasting authorities in the Federal Republic of Germany.

Operating the **SYNC. EXT.** key triggers a switchover to GENLOCK operation. To do this, a standard video signal must be supplied to the **LOOP THROUGH** socket. The VG 1100 derives all the clock signals from this signal. The **H-LOCK** LED lights up after a few seconds followed by the **Sc-LOCK** LED. This indicates to the user that the VG 1100 has been synchronized with both the external line frequency and the external color subcarrier frequency. With standard PAL the VG 1100 locks on the sequence of 4 and the sequence of 8. Should these LEDs not light up, please inspect the externally supplied video signal.

The VG 1100 also allows a shift from the H phase of the VG 1100 to the H phase of the source generator.

The Sc phases may also be shifted analogously. To do this, press the **SIGNALS/OUTPUTS** key in the **CONFIGURATE** operator panel.
The following appears on the LCD:

```
CONFIGURATE
  ITS   Markers                    etc.
```

and on operating the **etc.** softkey:

```
CONFIGURATE
Sc phase H phase pulse output      etc.
```

If the **H phase** softkey is now operated, the following appears on the LCD:

```
H shift:nn
Sc phase H phase pulse output      etc.
```

The **VARIATION (4)** control allows the H phase shift of the source generator to be shifted to the H phase of the VG 1100.
The number nn (in the range -100 to +100) corresponds to a phase shift of ca. ±2 µsec.
If the **Sc phase** key is pressed instead of the **H phase** softkey, the following appears on the LCD:

```
Sc phase ext.nnn
Sc phase H phase pulse output      etc.
```

The Sc phase shift is performed using the **VARIATION (4)** control. The number nn (in the range 0 to 999) corresponds to a phase shift of at least a full period or > 360°, depending on the standard (PAL, NTSC, SECAM).

2.2 Standard selection (STANDARD (9) operator panel)

The desired standard is selected using this operator panel. It contains the keys **PAL**, **NTSC** and **SECAM**. These keys only correspond to basic settings. An exact definition of the standard can be carried out using the LCD and the relevant softkeys.

2.2.1 PAL

When the **PAL** key is operated, the following appears on the LCD:

```
PAL B, D, G, H, I
B,G,D,H,I          M       N
```

The M (Brazil) or N (Argentina) standards can be selected using the adjacent softkeys. The selected standard then appears in the first line, e.g.:

```
PAL M
B,G,D,H,I          M       N
```

2.2.2 NTSC

You have a choice between two standards in the case of NTSC: NTSC 3.58 MHz and NTSC 4.43 MHz. Selection occurs as in the case of PAL with the softkeys and the LCD.

2.2.3 SECAM

If the SECAM standard is selected, you may choose between line + field identification and line identification only. The device must contain the SECAM option.

2.3 Test patterns (PATTERN (10) operator panel)

The **PATTERN** operator panel keys selects test patterns. The test patterns only represent general categories. Different versions of the selected test pattern can be selected using the LCD and the softkeys. A test pattern change always involves selecting a test pattern which was configured with softkeys during a previous test pattern selection.

2.3.1 Test pattern selection keys

If the **Crosshatch** key is operated, the following appears on the LCD:

```
Crosshatch  19/14          PAL BG
19/14 19/15 Crosshatch dots  DT/01  etc.
```

and after pressing the **etc.** softkey:

```
Crosshatch  19/14          PAL BG
        Overscan                    etc.
```

Any of the test patterns in the second line of the LCD can be selected using softkeys. The selected test pattern appears in the first line (on the left) on the LCD. If no softkey is operated, the VG 1100 displays the test pattern which was configured with sofkeys at a previous test pattern selection.
The selection of the remaining test patterns takes place in the same way and is not described in detail here. The table Test Patterns and Additional Functions contains information on the various test patterns.

2.3.2 Color carrier superimposition (Sc key)

The **Sc** key only affects the **STAIRCASE** and **SAWTOOTH** test patterns. When this key is pressed, the color subcarrier with a voltage of 140 mV or 280 mV is superimposed on these two test patterns. If the **STAIRCASE** test pattern is selected for example and the **Sc** key is pressed, the following appears on the LCD:

```
Staircase 5 st      +Sc 140 mV
  140 mV  280 mV
```

The color subcarrier can be superimposed on the staircase signal with either 140 mV or 280 mV using the appropriate softkey. If the **SAWTOOTH** test pattern is selected, the color subcarrier superimposition takes place on the sawtooth signal.

2.3.3 Circle fade-in (CIRCLE key)

Operate the **CIRCLE** key to fade in a circle in the selected test pattern. Test patterns containing a multiburst may reach levels exceeding white as the multiburst is not switched off in the area of the circle blanking. This operating status should be avoided in order to retain reasonable output levels.

2.3.4 Test pattern selection for options

The following should be noted about the keys **YCbCr 1, YCbCr 2, 4:2:2 Dig. Out, USER DEF., VPS, LABEL NO.** and **TXT:**
The **YCbCr 1** and **YCbCr 2** keys are not configured in the basic unit. They may only be operated if the **YCbCr Components** option is implemented. Refer to the Operating Instructions for the option **YCbCr Components** for a detailed description.
The **4:2:2 Dig. Out** key is not configured in the basic unit either. Refer to the Operating Instructions for the option **4:2:2 Digital Parallel Interface** for details.
The **USER DEF** key is reserved for customer-specific test patterns. It is not configured in the basic unit.

2.4 Chroma (CHROMA (8) operator panel)

2.4.1 Chrominance content (CHROMA key)

The chrominance content of the video signal is switched on and off using the **CHROMA** key. If the appropriate LED is lit, the chrominance content is present.

2.4.2 PAL selector switch (PAL + V key)

The **PAL + V** key is only effective with the PAL standard and the chrominance content switched on. When this key is pressed, the appropriate LED lights up and the PAL selector switch is deactivated.

2.4.3 SECAM identification (IDENT OFF key)

The **IDENT OFF** key switches off the video + line identification with the SECAM standard and color switched on. The **SECAM** option must be implemented.

2.5 Amplitude setting (AMPLITUDE (7) operator panel)

Individual components of the CVBS, chroma and multiburst signals can be attenuated using the **COMP./CAL, CHROMA, MULTIB.** keys and the softkeys. Value changes are made using the **VARIATION** control.
If the **Components** option is implemented, the amplitude (or parts of the amplitude) of the component signal can be affected. Refer to the Operating Instructions of the option **Components** for a detailed description.

2.5.1 CVBS signal (COMP./CAL key)

Individual components of the CVBS signal (CVB, VB, SY content or the entire CVBS signal) may be modified and calibrated using this key. If the FuBK test pattern is selected and the COMP./CAL key pressed, the following appears on the LCD:

```
FuBK                    Ampl. SY:300mV -43
CVBS:1000mV BA:700mV 100%
```

The first line of the LCD gives information about the status of the attenuator with the component which was last modified. (in the example: Sync. Ampl. with 300mV or -43%). Renewed operation of the **COMP./CAL** key causes the following to appear in the display:

```
FuBK                Ampl.
CVBS      CVB       VB        SY        Cal.
```

The components to be modified can be selected by operating the appropriate softkeys and the desired values input via the **VARIATION** control. The entire CVBS amplitude can be calibrated using the **Cal.** softkey. The modified value appears in the first line of the LCD.

2.5.2 Chroma signal (CHROMA key)

This attenuator only affects the chrominance content and the burst. When it is operated, the following appears on the LCD:

```
FuBK                    Ampl. Chroma:100%
                  Burst:100%
```

The component last modified appears in the first line (Chroma or Burst). Renewed operation of the **CHROMA** key causes the following to appear on the LCD:

```
FuBK                    Ampl.
Chr.+Burst      Chroma      Burst      Cal.
```

The component to be modified can be selected by operating the appropriate softkey and the amplitude changed using the **VARIATION** control. The amplitude of the chroma and burst components can be calibrated by operating the Cal. softkey. The modified value appears in the first line of the LCD.

2.5.3 Multiburst signal (MULTIB. key)

The multiburst and ITS amplitudes can be modified using this key. Multiburst during video, ITSs and multiburst during video + ITSs can be modified independently of each other. Operating the **MULTIB.** key causes the following to appear on the LCD:

```
FuBK                    Ampl. Video:100%
Multiburst: ITS:60%
```

The component last modified appears in the first line. Renewed operation of the **MULTIB.** key causes the following to appear on the LCD:

```
FuBK                    Ampl.
ITS+video       ITS       Video      MB cal.
```

The component to be modified can be selected by operating the appropriate softkey and modified using the **VARIATION** control. The multiburst and ITS amplitudes can be calibrated using the **MB cal.** softkey. The modified value appears in the first line of the LCD.

2.6 Device configuration (CONFIGURATE (3) operator panel)

The keys on the **CONFIGURATE** operator panel, i.e. **SIGNALS/OUTPUTS**, **PATTERNS/SERVICES** and **TEXT/TIME** - function in conjunction with the LCD and the softkeys. In this way further settings can be entered, e.g. for test patterns, pulse outputs, options implemented etc. The different options (2nd line of the LCD) depend on the key operated on the operator panel.

2.6.1 Configuring test patterns (SIGNALS/OUTPUTS key)

2.6.1.1 Color carrier selector switch

Test patterns containing a reference phase content (e.g. ITS, Sc superimposition) allow the user to choose whether the phase position of the color carrier should be switched (+-60°) or not switched (+60°).
When a particular test pattern - not multiburst: sweep over line/video - is selected, the following appears on the LCD:

```
CONFIGURATE
ITS                                    etc.
```

and after operating the **ITS** softkey:

```
ITS On Ref.phase:+/-60°
Ref.phase       ITS On/Off     Config.ITS
```

If the **Ref. Phase** key is now operated, the following appears on the LCD:

```
ITS On Ref.phase:+/-60°
  +60°     +/-60°
```

Using the two softkeys, the phase position of the color subcarrier can be changed from "switched" (+/-60°) to "not switched" (+60°) with modulated signals.

2.6.1.2 ITS fade-in

The VG 1100 permits the assignment of different ITS signals to the lines 17, 18, 19, 330, 331 and 332.
When a particular test pattern- not multiburst: sweep over line/video- is selected, the following appears on the LCD:

```
CONFIGURATE
ITS                                    etc.
```

and after operating the **ITS** softkey:

```
ITS On Ref.Phase +/-60°
Ref.Phase       ITS On/Off      Conf.ITS
```

The ITSs can be switched on and off using the **ITS On/Off** softkey. Line 1 of the LCD displays the current status.
ITSs can be assigned to video lines using the **Config.ITS** softkey. It is also possible to assign ITS signals 17 and 18 to lines 17, 18 and 19 in the first field and to assign ITS signals 330, 331 and 332 to lines 330, 331 and 331-a in the second field. When the **Config.ITS** softkey is operated, this menu appears on the LCD:

ITS assignment menu:

```
Config.ITS L17<--ITS 18
   Off      ITS17      ITS18     Return
```

ITS signal 17 or 18 can be assigned to line 17 using the softkeys (in the example ITS signal 18 is assigned to line 17). The ITSs displayed in line 1 of the LCD can be switched off using the **Off** softkey. The **Return** softkey is operated to complete the entry and the **Line selection menu** appears. This is used to select the lines to be assigned with ITS signals. The following appears on the LCD:

```
Config.ITS L17<--ITS 18
            L17       L18       L19     etc.
```

and after operating the **etc.** softkey:

```
Config.ITS  L17<--ITS 18
L330       L331      L332             etc.
```

The softkeys are now used to select the line which is to be assigned with an ITS signal. When a softkey is operated, the **ITS assignment menu** appears (see above).

Note: The color carrier switchover and the ITS fade-in occur in the same way in the case of the multiburst sweep over line/video test pattern. However, after the SIGNALS/OUTPUT key is operated, the following appears on the LCD:

```
CONFIGURATE
  ITS       Markers                  etc.
```

2.6.1.3 Sc to H phase shift

The VG 1100 generates the video signal with the correct F/H phase identification and a sequence of 4 or 8, as described in Technical Specification 8/3.1 of the broadcasting authorities in the Federal Republic of Germany. See Figure 1 (F/H phase to EBU definition) and Figure 2 (PAL 8 field sequence) in the appendix. The user can however change the phase position of the color subcarrier to the sync pulse.
If the **SIGNALS/OUTPUTS** key in the **CONFIGURATE** operator panel is operated, the following appears on the LCD:

```
CONFIGURATE
  ITS                                  etc.
```

and after operating the **etc.** softkey:

```
CONFIGURATE
Sc-H phase   Pulse output             etc.
```

When the **SC-H phase** softkey is operated, the following appears on the LCD:

```
This will change the int. Sc-H phase.
 Are you sure?     Yes        No
```

If you answer "Yes", the following appears on the LCD:

```
Int.Sc-H phase:152
  No change.   Quit
```

The **VARIATION** control can be used to modify the phase shift. The variation range is at least 360°. The displayed figure has no dimension and is not a measurement of the absolute phase position. It only

serves as an orientation point. The value input must be confirmed with "Quit". Only then is it accepted and stored. This value is also retained after the RESET key is operated. In the case of **No change**, you may leave the menu, the previous value is then retained.

Note: Use this value or appropriate measuring equipment to return to the correct factory settings for the phase position.

d) Multiburst markers

The VG 1100 allows the user to fade in markers in the multiburst signal (only with sweep over line and sweep over video). Markers with 1 MHz or 2 MHz spacing can be selected. Alternatively a variable marker with the control in the range 0.5 MHz to 10/20 MHz can be faded in. The resolution is 100 kHz. The markers are displayed by an amplitude decrease of ca. 10% of the multiburst signal.

If the test patterns multiburst sweep over line or multiburst sweep over video are selected, the following appears on the LCD when the **SIGNALS/OUTPUTS** key is operated:

```
CONFIGURATE
  ITS   Markers                    etc.
```

and when the **Markers** softkey is operated:

```
MB markers Off
  Off     1MHz     2MHz          variable
```

The markers can be switched off and faded in with 1 MHz or 2 MHz spacing using the appropriate softkeys. A variable marker can be faded in using the **variable** softkey and the **VARIATION** control in the range 0.5 MHz to 10/20 MHz.

2.6.2 Configuring the TXT/VPS (PATTERNS/SERVICES key)

The **PATTERNS/SERVICES** key only functions in conjunction with the Teletext/VPS option. Please refer to the Operating Instructions for the **Teletext/VPS Option** for a detailed description.

2.6.3 Configuring the clock/text (TEXT/TIME key)

2.6.3.1 Configuring the text

Even the basic unit of the VG 1100 offers a comprehensive text generator. Up to 16 different texts of 16 characters each can be input and 3 text sizes are possible. One of these texts can be added to any test pattern in any position. The text is also retained after the unit is switched off. The text can be faded in on a black background or directly onto the current test pattern depending on the background selection. A monitor must be connected for configuring the text.

If the **TEXT/TIME** key in the **CONFIGURATE** operator panel is operated, the following appears on the LCD:

```
Text   Clock   Language
```

and when the **Text** softkey is operated, the **Text selection menu** appears:

```
Text 01 Off /with background/without
Text On/Off  Text+   Text-     Conf.
```

The text can be switched on and off using the **Text On/Off** key and one of the 16 possible texts selected with the softkeys **Text+/Text-**. If the text is switched off here, this only becomes effective on the next test pattern change. The text is still faded in as information for the moment. The **Conf.** softkey activates the **Text size menu**:

```
Text 01 Off /with background/without
Bg On/Off  Text+  single  double  triple
```

The **Backg. On/Off** softkey is used to select whether text should appear on a black background or directly on the current test pattern. The **Text+** softkey allows the user to browse in the text memory.

The user can select the text position on the screen using the **VARIATION** control and the **CURSOR DIRECTION** keys. The **single**, **double** and **triple** softkeys select the text size. After one of these softkeys has been operated, the **Text input menu** appears on the LCD:

```
Text 01 Off /with background/without
Space  A-Z  a-z  Digits/SpChars  Return
```

The cursor can be positioned on one of the 16 describable characters using the **VARIATION** control ("Text 01" may be overwritten). The desired character can be input using the softkeys **Space, A-Z, a-z** and **Dig/SpCh**. The **Return** softkey terminates text input and the **Text selection menu** (see above) appears for the editing of further texts.

Note: Changing test patterns within the **Text size** or **Text input** menu is not possible.

2.6.3.2 Configuring the clock

A real time clock is built into the VG 1100 basic unit. 3 different sizes can be selected and assigned to any test pattern at a particular position. Furthermore the information can be displayed on the LCD in different languages.

If the **TEXT/TIME** key of the operator panel **CONFIGURATE** is operated, the following appears on the LCD display:

```
Text   Clock Language
```

and when the **Clock** softkey is operated the **Clock selection** menu:

```
Clock/Off
Clock/Off   C1   C2   C3    Conf. clock
```

The **Clock/Off** softkey is used to switch off the clock fade-in. The softkeys **Clock1**, **Clock2** and **Clock3** are used to fade in the desired clock. After the **Conf. Clock** softkey has been operated the **Config/Set** appears:

```
Conf.clock
Conf.C1 Conf.C2 Conf.C3 Set clock Return
```

The user can set the clock using the **Set clock** softkey and configure the various clocks using **Conf. C1**, **Conf. C2** and **Conf. C3**. The **Return** softkey brings you back to the **Clock selection** menu (see above).

If the **Conf. C1**, **Conf. C2** or **Conf. C3** softkey is operated you go to the **Config. Clock** menu.

```
Clock_1
  Exit    single  double  triple  Return
```

The clock selected with **Config. Cx** can now be freely positioned on the screen using the **CURSOR**

DIRECTION keys. The **single**, **double** or **triple** softkeys determine the size of the positioned clock. Press **Exit** to leave the menu and **Return** to go to the higher-level menu **Config/Set clock**.
If the softkey **Set clock** is operated in the menu **Config/Set**, you go to the **Set clock** menu:

```
Set clock      Month  01
  Exit    T +     T -     U +    U -
```

This table appears on the monitor:

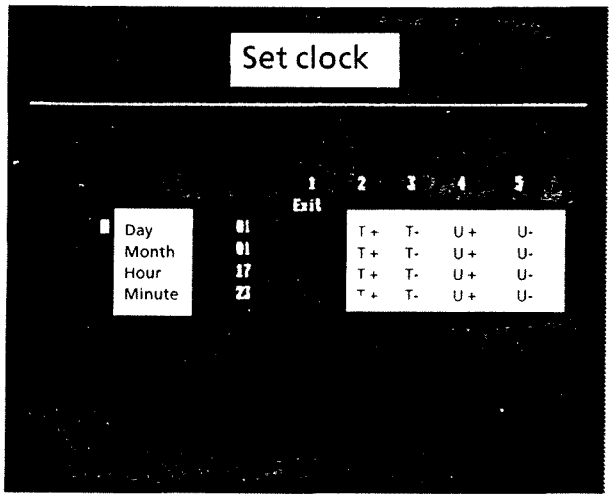

The clock can be set either on the LCD or on the monitor screen. The **VARIATION** control is used to select the parameters to be modified (day, month, hour and minute). The selected parameter appears on the second line of the LCD. Values are input with the appropriate softkeys (in increments of ten or one). Illegal inputs are not possible. The unit (U + U-) should first be input and then the ten (T + T-). The **Exit** softkey sets the second display to zero, starts the clock and leaves the **Set clock** menu.
The electronic clock also operates when the unit is switched off as this circuitry receives its operational voltage from a built-in storage battery. It is only if the unit remains switched off for a long time (ca. 6 months) that the clock may malfunction, i.e. the battery requires regular recharging.

Note: When text or a clock is faded in to multiburst signals, levels may be reached which are greater or less than White and Black, as the multiburst is not switched off during the fade-in time. For this reason the text and clock selection is locked in the case of pure multiburst videos. Text and clock positions in the multiburst signal range should be avoided with signals such as FuBK and ITS (if a multiburst content is present).

2.6.3.3 Language selector switch

The VG 1100 allows the information on the LCD to be displayed in German or English. If the **TEXT/TIME** key on the **CONFIGURATE** operator panel is operated, the following appears on the LCD:

```
Text   Clock Language
```

and if the **Language** softkey is operated, the **Language selection menu** appears:

```
German        English
```

When one of the two softkeys is operated, all the information on the LCD appears in the selected language. The first line of the LCD displays the **Number of the current software** (e.g. SW version 5.12) for a few seconds. You then leave the **Language selection** menu.

3. Configuring the pulse outputs

The pulse outputs H, A, K, S, P and V are available for the user on the rear panel of the VG 1100. Please refer to Figures 3 and 4 in the appendix for details. The audio sockets can be assigned with the pulses V25, V8, Frame, A(H), H/2 or H/4 by retrofitting and with the help of wire jumpers. The user can thus determine the polarity of these pulses.
If the **SIGNALS/OUTPUTS** key in the **CONFIGURATE** operator panel is operated, the following appears on the LCD:

```
CONFIGURATE
  ITS                                  etc.
```

and when the **etc.** softkey is operated:

```
CONFIGURATE
Sc phase        Pulse output          etc.
```

The **Pulse Configuration** menu can be selected using the **Pulse output** softkey. The status of the currently selected pulse output appears in the first line of the LCD, while the possible polarities are displayed in the second.

```
Conf. pulse output  H   0->Neg.
 Pos.->0 0->Pos. 0->Neg. Neg.->0  Return
```

When the **Return** softkey is operated, the **Pulse selection** menu appears:

```
Conf. pulse output  H   0->Neg.
  H        A        S        K        etc.
```

and when the **etc.** softkey is pressed:

```
Conf. pulse output  H   0->Neg.
  P        V      Res_1    Res_2    etc.
```

Once the required pulse output has been selected using one of the softkeys, the **Pulse config.** menu (see above) appears and the pulse polarity can be selected.

4. Options

The following options are currently available for the VG 1100:

- YCbCr components (generates the video signal in the YCbCr and GBR format).
- Secam (generates the color signal in the Secam standard in addition).
- Teletext/VPS (permits the insertion of teletext and VPS signals).
- IEEE 488 (remote control over IEC interface).
- 16:9 (generates the FuBK test pattern in 16:9 format).

The following options are under development:

- 4:2:2 Digital parallel interface to CCIR 601.
- 4:2:2 Digital serial interface.

4. Index

Amplitudes	2.5
Switch off	1.1
CCIR 624-3	1
Chroma	2.4
Switch on	1.1
Color subcarrier	2.6.1.1
Color subcarrier output	1
Color subcarrier superimposition	2.3.2
CVBS (Composite) outputs	1
GenLock operation	1
IEEE 488 (IEC Bus) module	1
Pulse outputs	1/3
Circle	2.3.3
Loop-through connections	1
Multiburst	2.5.3
Standards	2.2
NTSC	2.2.2
PAL	2.4.1
PAL selector switch	2.4.2
ITSs	2.6.1.2
Reset	1.2
Clock	2.6.3.2
Select clock	2.6.3.2
Configure clock	2.6.3.2
Set clock	2.6.3.2
Text	2.6.3.1
Text input	2.6.3.1
Configure text	2.6.3.1
Secam	2.2.3
Secam identification	2.2.3
Software version	2.6.3.3
Sequence of 4	2.1
Sequence of 8	2.1
Keyboard	1
Test pattern selection	2.3.1
Teletext/VPS	2.6.2

5. Appendix

5.1 Tables of test pattern and additional functions

Key	Softkey assignment	Model: only with option [1]	Model: from SW version [2]	Description
	• FuBK			
	• FuBK 16:9	16:9	6.xx	Test pattern similar to FuBK but in 16:9 video format
Combined test	• VTR			
patterns	• Philips		3.xx	Used in many countries instead of the FuBK test pattern commonly used in Germany, e.g. Norway, UK, Holland, Austria, Italy, Spain.
	• 19/14			Crosshatch with 19 vertical + 14 horizontal lines and 25% grey marking
	• 19/15			Crosshatch with 19 vertical + 15 horizontal lines and 25% grey marking
Geometrical	• Crosshatch/ dots			Crosshatch with 19 vertical + 14 horizontal lines and dots and 25% grey marking
test patterns	• Dot/T01			Dot raster which coincides with the intersection points of the T01 test pattern model (camera alignment)
	• etc.			Switch to next level
	• Crosshatch 16:9	16:9	6.xx	Crosshatch with 25 vertical + 15 horizontal lines and 25% grey marking in the 16:9 format
	• Overscan			Centring test pattern with markers for 0, 2, 5 and 10% overwrite
	•			
	•			
	• etc.			Switch to previous level
	• 100/0/75/0			EBU color bar signal with 100% white bar
	•			
Various	• 75/0/75/0			EBU color bar signal with 75% white bar
color bars	•			
	• etc.			Switch to next level
	• 100/0/100/0			Color bar with 100 % amplitude
	•			
	• 100/0/100/25			EBU color bar signal for I standard (UK)
	•			
	• etc.			Switch to previous level
	• Red			Color raster
	• Green			Color raster
Color rasters	• Blue			Color raster
	• Yellow			Color raster
	• etc.			Switch to next level
	• Cyan			Color raster
	• Magenta			Color raster
	• White			Color raster
	• Black			Color raster
	• etc.			Switch to previous level

5.1 Tables of test pattern and additional functions

Key	Softkey assignment	Model: only with option [1]	Model: from SW version [2]	Description
SPECIAL COLOR	• FB back		3.xx	Color bar test pattern (100/0/75/0) / side-inverted color bar/color bar division at $^1/_3$ of picture height
Special color test patterns	• FB hor		3.xx	Horizontal color bar test pattern
	• Dec.RGB		3.xx	Color bar test pattern (100/0/75/0) with 75% grey reference in the lower third of the picture
	• 15 kHz		3.xx	2T/20T/15 kHz signal
	• etc.			Switch to next level
	• Dem.Test		3.xx	Demodulator test pattern with fields for U, V, the appropriate achromatic fields (± U, + V) and a field for G-Y = 0. The fields U, V, ±U, +V are demodulated linearly from $-U_{max}$ to $+U_{max}$, field G-Y has a constant amplitude.
	•			
	•			
	•			
	• etc.			Switch to previous level
BLACK WHITE	• 50Hz			50 Hz black-to-white transition
	• 250KHzT			250 kHz square, rise time T
Special black and white test patterns	• 250KHz2T			250 kHz square, rise time 2T
	• 10 µs blanking			50 Hz black-to-white transition with shortened blanking time (H blanking 10 µs instead of 12 µs).
	• etc.			Switch to next level
	• Pluge1		2.xx	Test signal for adjusting monitors +2 %/–2 %, 4-level grey scale
	• Pluge2		3.xx	Pluge signal 2 as Pluge1 but with 2-level grey scale
	• Window1		3.xx	Window signal 1, white area with 100% white for measuring color temperature
	• Window2		3.xx	Window signal 2; as window signal 1, but with 15% grey instead of 100% white
	• etc.			Switch to previous level
Y C_B C_R 1	• Mltp 5.8	YC_BC_R	4.xx	Multipulse signals with frequencies as in ITS 18
	• Mltp EBU	YC_BC_R	4.xx	Multipulse signals to EBU 3219, Part 5 with frequencies up to 4.5 MHz or 2.5 MHz
also (SPECIAL	•			
YUV or	• Mltp 20	YC_BC_R	4.xx	Multipulse signals with frequencies up to 20 MHz
SPECIAL	• etc.			Switch to next level
YC_BC_R)	• Bowtie1	YC_BC_R	4.xx	Operating time measuring signal 500/502 kHz and markers with 5 ns und 20 ns
Special signals	• Bowtie2	YC_BC_R	5.xx	as Bowtie1 but blurred
for component	• Coring	YC_BC_R	5.xx	Test signal for measuring noise suppression circuits
measuring	•			
technique	• etc.			Switch to previous level
Y C_B C_R 2	• PulStp	YC_BC_R	5.xx	Pulse and white signals to EBU 3219, Part 5 with 2 T/5 T pulse and short and long white pulse
also	• nT__Pulse	YC_BC_R	5.xx	Positive and negative pulse signals of 10 T/20 T to 1.5 T/2 T
(USER DEF.1)	• val__Rmp	YC_BC_R	4.xx	Ramp with valid signals in the GBR area
special signals	• val__Stc	YC_BC_R	4.xx	Sawtooth with valid signals in the GBR area
for component	• etc.			Switch to next level
measuring	• Sawtooth	YC_BC_R	4.xx	Sawtooth on all 3 channels
technique	• LinSc5	YC_BC_R	4.xx	5-step staircase on all 3 channels
	• LinSc10	YC_BC_R	4.xx	10-step staircase on all 3 channels
	• sh__Rmp	YC_BC_R	5.xx	Flat ramp with adjustable setup
	• etc.			Switch to previous level

5.1 Tables of test pattern and additional functions

Key	Softkey assignment	Model: only with option [1]	Model: from SW version [2]	Description
Multiburst signals	● ..6 MHz			Packets with 0.5/1/2/3/4/5/6 MHz
	● ..20 MHz			Packets with 1/3/5/7/ 10/15/20 MHz
	● VTR			Packets with 0.5/2/3/3.5/4/4.5/5 MHz
	● Fixed freq.		4.xx	Fixed frequencies of 0.5 MHz to 20 MHz selected over rotary switch, resolution of 100 kHz
	● etc.			Switch to next level
	● B..10 MHz			Sweep over video 0.5..10 MHz
	●			
	● B..20 MHz			Sweep over video 1..20 MHz
	●			
	● etc.			Switch to next level
	● Z..10 MHZ			Sweep over line 0.5..10 MHz
	●			
	● Z..20 MHz			Sweep over line 1..20 MHz
	●			
	● etc.			Switch to previous level
ITS Insertion Test Signals = inspection lines switched over frame	● 17			ITS 17
	● 18			ITS 18
	●			
	●			
	● etc.			Switch to next level
	● 330			ITS 330
	● 331			ITS 331
	● 331-a			ITS 331-a, as 331, but 3 packets
	●			
	● etc.			Switch to previous level
GREY Grey values over frame	● 0 %			Grey rasters with 10% gradation
	● 10 %			
	● 20 %			
	● 30 %			
	● etc.			Switch to next level
	● 40 %			
	● 50 %			
	● 60 %			
	● 70 %			
	● etc.			Switch to next level
	● 80 %			
	● 90 %			
	● 100 %			
	●			
	● etc.			Switch to previous level

Variable or fixed markers (1 MHz/2MHz) switchable via **CONFIGURATE** menu

5.1 Tables of test pattern and additional functions

Key	Softkey assignment	Model: only with option [1]	Model: from SW version [2]	Description
DIG. OUT 4:2:2 also USER DEF. 2				Reserved for test signals to the digital interface in accordance with the 4:2:2 standard
 Staircase signals	• 5 St • 7 St • 10 St • 15 St • etc. • 10 St/h • • • • etc.			Staircase with 5 steps Staircase with 7 steps Staircase with 10 steps Staircase with 15 steps Switch to next level Staircase with 10 horizontal steps (VDE 0871) Switch to previous level
 Color carrier superimp imposition	• 140 mV • 280 mV • • •			Functions as additional function on linear scale (not on 10 St/h) und sawtooth Overlay color carrier with 140/280 mV_{pp}
 Sawtooth signals	• du/dt + • du/dt - • Special • Peak •		3.xx	Sawtooth with positive increase Sawtooth with negative increase Ultrablack sawtooth Sawtooth without constant content
USER DEF. also USER DEF.3				Special customer-specific test patterns
VPS Select VPS mode	• L16 • L16 + video • Video • Off •	TXT/VPS		Data in line 16 only Data in line 16 and video Data in video only VPS switched off

5.1 Tables of test and additional functions

Key	Softkey assignment	Model: Option [1]	Model: from SW version [2]	Description
LABEL NO. VPS label selection	• 1(05.01.20:15)	TXT/VPS		Label with no. (Date time) Select the labels predefined under the **CONFIGURATE** menu
	• 2(..... ...:..)			
	• etc.			Switch to next level
	• 3(..... ...:..)			
	• 4(..... ...:..)			
	• etc.			Switch to next level
	• Interrupt			
	• Blank code			
	• Status code			
	• etc.			Switch to next level
TXT Teletext	• TXT lines	TXT/VPS		Teletext only in the lines predefined under the **CONFIGURATE** menu
	•			
	• TXT + video			Teletext can be faded into the configured lines and over the entire frame
	• Video			Teletext can only be faded into video
	• Off			Teletext lines off
 Circle				Circle test pattern may be switched on/off

[1] standard unit if not otherwise specified

[2] SW version 2.xx if not otherwise specified

Panel	Key	Softkey assignment	Model: only with option [1]	Model: from SW Version [2]	Notes
(9) STANDARD (Standard selector switch)	PAL				
		• B,D,G,H,I			625 lines, video freq.: 50 Hz, Color carrier: 4.43 MHz
		•			
		• M			525 lines, video freq.: 60 Hz, Color carrier: 3.575 MHz
		• N			625 lines, video freq.: 50 Hz, Color carrier: 3.582 MHz
		•			
	NTSC	• 3.58 MHz			525 lines, video freq.: 60 Hz, Color carrier: 3.58 MHz
		• 4.43 MHz			525 lines, video freq.: 60 Hz, Color carrier: 4.43 MHz
		•			
		•			
		•			
	SECAM	• L + V ident	SECAM		Line and video identification
		•			
		• L ident	SECAM		Line identification only
		•			
		•			
(8) CHROMA (On/Off switch)	CHROMA				Chroma on/off, LED on, if CHROMA ON
	PAL +V				PAL selector switch is switched on and off, LED on when PAL OFF
	IDENT OFF		SECAM		SECAM identification switched on and off, LED on,when IDENT OFF
(7) AMPLITUDE (Attenuator)	COMPO./CAL				**Status is displayed. Press key again to display menu**
		• FBAS			Attenuator for CVBS (entire video signal)
		• FBA			Attenuator for CVB (without Sync.)
		• BA			Attenuator for VB (without multiburst and color)
		• SY			Attenuator for SYNC alone
		• Cal.			Calibration of signals (affects all parameters)
					When the attenuator is switched to option YC_bC_r, the softkeys obtain the following assignments:
		• YC_bC_r	YC_bC_r	4.xx	YC_bC_r all changed
		• Y			only Y (not sync.) is changed
		• C_b			only C_b (not Multiburst) is changed
		• C_r			only C_r (not Multiburst) is changed
		• Cal.			Calibration of signals (affects all parameters)
	CHROMA				**Status is displayed. Press key again to display menu**
		• Chr. + Burst			Entire color signal is attenuated
		•			
		• Chroma			only Chroma (not Burst) is attenuated
		• Burst			only Burst is attenuated
		• Cal.			Calibration of color parameters
					When the attenuator is switched to option YC_bC_r, the softkeys obtain the following assignments:
		• YC_bC_r	YC_bC_r	4.xx	Entire color signal is attenuated
		• Y			only Y (not Sync.) is changed
		• C_b			only C_b (not Multiburst) is changed
		• C_r			only C_r (not Multiburst) is changed
		• Cal.			Calibration of signals (affects all parameters)

Panel	Key	Softkey assignment	Model: only with option [1]	Model: from SW version [2]	Description
	MULTIB.				**Status is displayed. Press key again to display menu**
		• ITS + video			Multiburst in ITS and video is attenuated
		•			
		• ITS			Multiburst of ITS is attenuated, video remains unchanged
		• Video			Multiburst in video is attenuated, ITS remains unchanged
		• MB cal.			Calibration of multiburst parameters
					When the attenuator is switched to option YC_bC_r, the softkeys obtain the following assignments:
		•	YC_bC_r	4.xx	Multiburst amplitude can be changed immediately after calling
		•			
		•			
		•			
		• MB cal.			Calibration of multiburst parameters
(6) SYNC. EXT.	**SYNC. EXT.**				on/off function, indicated by LED
(3) CONFIGURATE	**SIGNALS/ OUTPUTS**				
		• ITS			Configuring the ITSs
		•• Ref.phase			Select phase position of the ITS color carrier superimposition
		••• +60°			Phase position of color subcarrier +60° (Cancel PAL switch)
		••• +/-60°			Alternating phase position of color subcarrier
		•••			
		•••			
		•••			
		••			
		•• ITS On/Off			All ITSs On/Off
		••			
		•• Config. ITS			**Status of the last ITS entry is displayed. Press Return to proceed in menu.**
		•••			
		••• L17			Select the line in which the ITS
		••• L18			is to be inserted
		••• L19			
		••• etc.			
		•••• Off			
		•••• ITS17			Select the ITS which is to be
		•••• ITS18			inserted into the selected TV line
		••••			
		•••• Return			
		•••			
		••• L330			Select the line in which the ITS
		••• L331			is to be inserted
		••• L332			
		••• etc.			
		•••• Off			
		•••• ITS330			Select the ITS which is to be
		•••• ITS331			inserted into the selected TV line
		•••• ITS331-a			
		•••• Return			

Panel	Key	Softkey assignment	Model: only with option [1]	Model: from SW version [2]	Description
		• Markers			Select the markers switchable with the multiburst signals
		•• Off			
		•• 1MHz			Frequency markers 1 MHz spacing
		•• 2MHz			Frequency markers 2 MHz spacing
		••			
		•• variable			Frequency markers Variable spacing (adjust using rot. switch), Resolution 100 MHz
		• Ampl→CVBS or • Ampl→YCbCr	YC_bC_r	4.xx	**Switch attenuator from CVBS to YC_bC_r and vice versa. The inactive attenuator is retained in the background.**
		• YCbCr	YC_bC_r	4.xx	Configuring the three outputs Y, C_b, C_r
		•• MB - Y			The multiburst on the Y(G) channel can be switched on and off.
		•• MB - Cb			The multiburst on the C_b(B) channel can be switched on and off.
		•• MB - Cr			The multiburst on the C_r(R) channel can be switched on and off.
		••			
		•• Sync			The sync. pulse on the Y(G) channel can be switched on and off.
		• etc.			
		• Sc phase			**If SYNC.EXT. OFF:**
		•• Yes			Display: **This will change the Int. Sc-H phase!!! Are you sure ?**
	Var. control	•••			Value may be changed with rotary switch
		••• No change			Original value retained in memory
		•••			
		••• Quit			New value is accepted
		•••			
		•••			
		•• No			Return to main menu
					If SYNC.EXT. ON:
		•• Sc phase			Display: **Sc-Phase Ext ..**
	Var. control	•••			Adjust using variation control
		•• H phase			Display: **H delay: ...**
	Var. control	•••			Use rotary switch to adjust in the range +100 (ca. +2.5µs) und -100 (ca.-2.5µs)
		•• Return			
		• Pulse output			**Displays status. Press Return to proceed in menu**
		•• H			Horizontal signal
		•• A			Blanking signal
		•• S			Synchronous signal
		•• K			Burst characteristic pulse
		•• etc.			Switch to next level
		•• P			PAL characteristic pulse
		•• V			Vertical signal
		•• Res__1			Reserved for any signals
		•• Res__2			Reserved for any signals
		•• etc.			Switch to next level
		••• Pos→0			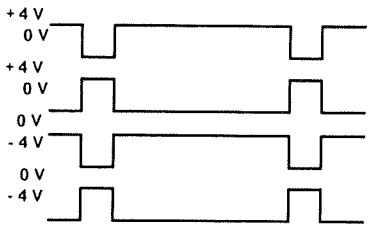 Pre-setting for **RESET (11)**
		••• 0→Pos			
		••• 0→Neg			
		••• Neg→0			
		••• Return			
		• etc.			

Panel	Key	Softkey assignment	Model: only with option 1)	Model: from SW version 2)	Description
	PATTERNS/ SERVICES				**Displays the lines in which TXT is transmitted.**
		• TXT	TXT/VPS	2.xx	Display: **TXT ./../../../../ TXT_1: L../...**
		•• TXT_1			Configuration of the current teletext fade-in
		•• TXT_2			A maximum of 6 lines per field may be assigned
		•• TXT_3			
		•• TXT_4			
		•• etc.			
		•• TXT_5			
		•• TXT_6			
		••			
		••			
		•• etc.			
		••• +			Select TV line in which TXT is to be transmitted
		••• –			(from lines 6 to 15) + = ascending; – = descending
		••• Off			
		••• Return			
		• VPS			
		•• Label 1			Configuration of label 1, See table for softkey assignment
		•• Label 2			Configuration of label 2, See table for softkey assignment
		•• Label 3			Configuration of label 3, See table for softkey assignment
		•• Label 4			Configuration of label 4, See table for softkey assignment
		•• etc.			
		•• Interrupt code			Conf. special label (Time not adjustable), See table for softkey assignment
		••			
		•• Blank code			Conf. special label (Time not adjustable), See table for softkey assignment
		•• Status code			Conf. special label (Time not adjustable), See table for softkey assignment
		•• etc.			
	Var. control	•••	TXT/VPS	2.xx	Selection via Var. control: Softkey assignment:

Sound	EXIT	Mono	Stereo	2 channel	
U certificate	EXIT	Yes	No		
Add. assignm.	EXIT	1	2	3	4
Day	EXIT	T+	T-	U+	U-
Month	EXIT	T+	T-	U+	U-
Hour	EXIT	T+	T-	U+	U-
Minute	EXIT	T+	T-	U+	U-
Prog. source	EXIT	T+	T-	U+	U-
Country code	EXIT	+	-		

	TEXT/TIME				**Status is displayed**
		• TEXT			Display: **Text .. On < Off >/with < without > blanking/single < double > < triple >**
		•• Text On/Off			Text is assigned to currently selected test pattern with **On**
		•• Text +			Browse in text memory with Text + / Text-;
		•• Text –			text is not yet assigned to test pattern
		•• Conf. Text			
		••			
		••• Blank. On/Off			Select background: with or without blanking
		••• Text +			Select text to be modified
	Var. control				Position the text horizontally and vertically using the variation control. To select direction, use **(5) CURSOR DIRECTION**
		••• Single			Select text size
		••• Double			Select text size
		••• Triple			Select text size
		•••• Blank			Input: Blanks
		•••• A-Z			Upper-case letters
		•••• a-z			Upper-case letters
		•••• Dig/SpCh			Digits and special characters
		•••• Return			Store up to cursor position in text memory

GRUNDIG electronic

Panel	Key	Softkey assignment	Model: Only with option [1]	Model: from SW version [2]	Description
		• CLOCK			
		•• Clock/Off			Switch off clock in current test pattern
		•• Clock 1			Select prepositioned clock — Clock is assigned to test pattern
		•• Clock 2			Select prepositioned clock — Clock is assigned to test pattern
		•• Clock 3			Select prepositioned clock — Clock is assigned to test pattern
		•• Conf.Clock			Call up configuration menu
		••• Conf.C1			Select clock
		••• Conf.C2			Select clock
		••• Conf.C3			Select clock
		•••• Exit			End configuration
		•••• Single			Select clock size Position with variation control and CURSOR DIRECTION
		•••• Double			Select clock size Position with variation control and CURSOR DIRECTION
		•••• Triple			Select clock size Position with variation control and CURSOR DIRECTION
		•••• Return			
		••• CLOCK St			Set clock
	Var. control	••••			Select via rotary switch: Softkey assignment: Day EXIT T+ T- U+ U- Month EXIT T+ T- U+ U- Hour EXIT T+ T- U+ U- Minute EXIT T+ T- U+ U-
		• LANGUAGE			
		•• German			Select language for display (for ca. 1 s the version number of the software is displayed)
		•• English			
	Var. control	•• IEEE		3.xx/4.xx	only test patterns from 3.xx; Complete IEEE control from 4.xx; Specify the IEEE address via variation control

• Submenu 1
•• Submenu 2
••• Submenu 3
•••• Submenu 4

5.2 Sc-H phase position

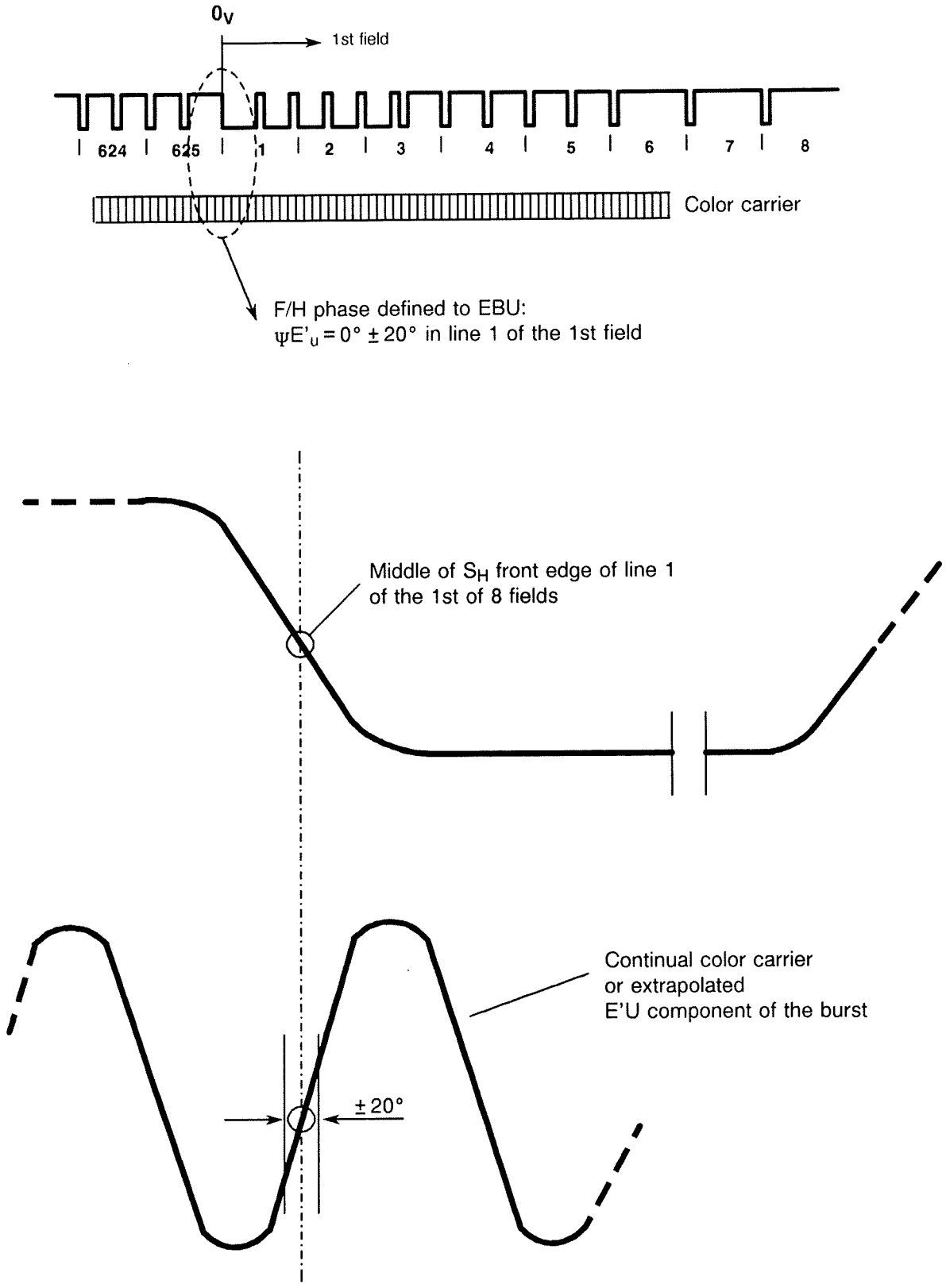

Figure 1 F/H phase to EBU definition

5.3 PAL 8V Sequence

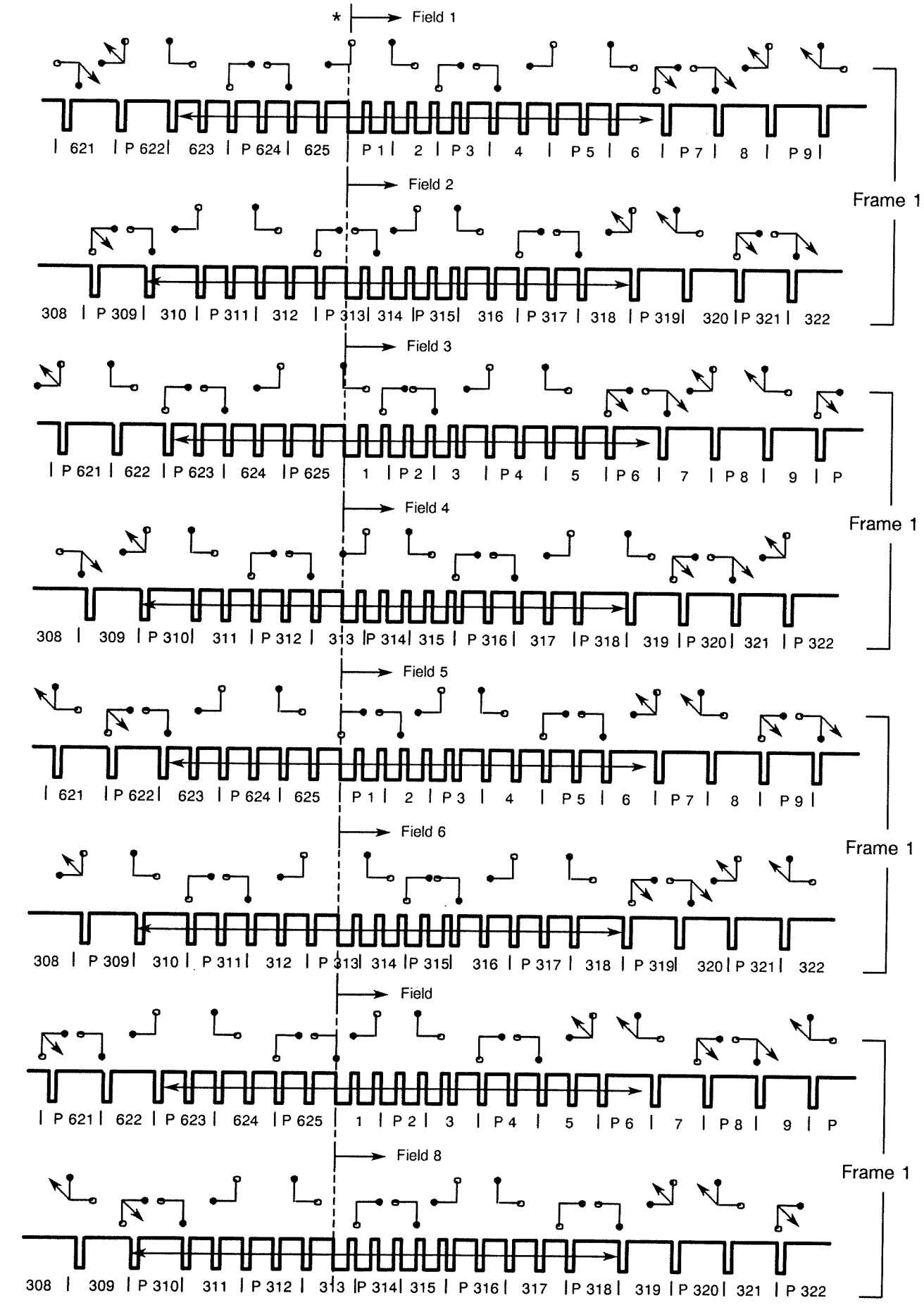

-E'$_U$' E'$_V$ not inverted, Burst, P: Line with P pulse, E'$_V$ is not inverted in this line

* Colour carrier phase to EBU statement D 23/1979: $\psi E'_U = 0°$ in line 1 of the first field

Figure 2 PAL 8 V sequence

5.4 Pulse output

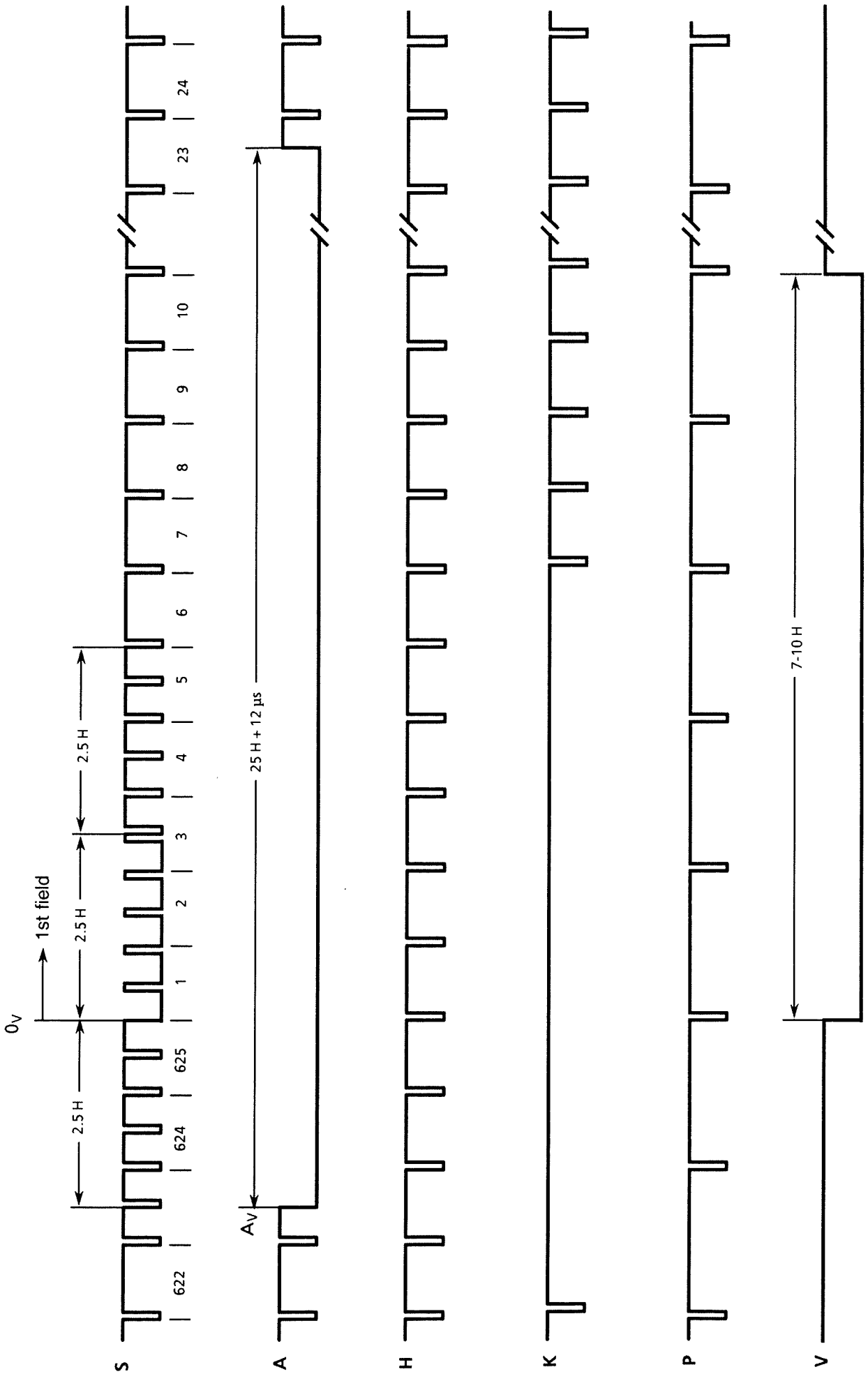

Figure 3 Signal generator signals at the start of the first field

5.4 Pulse output

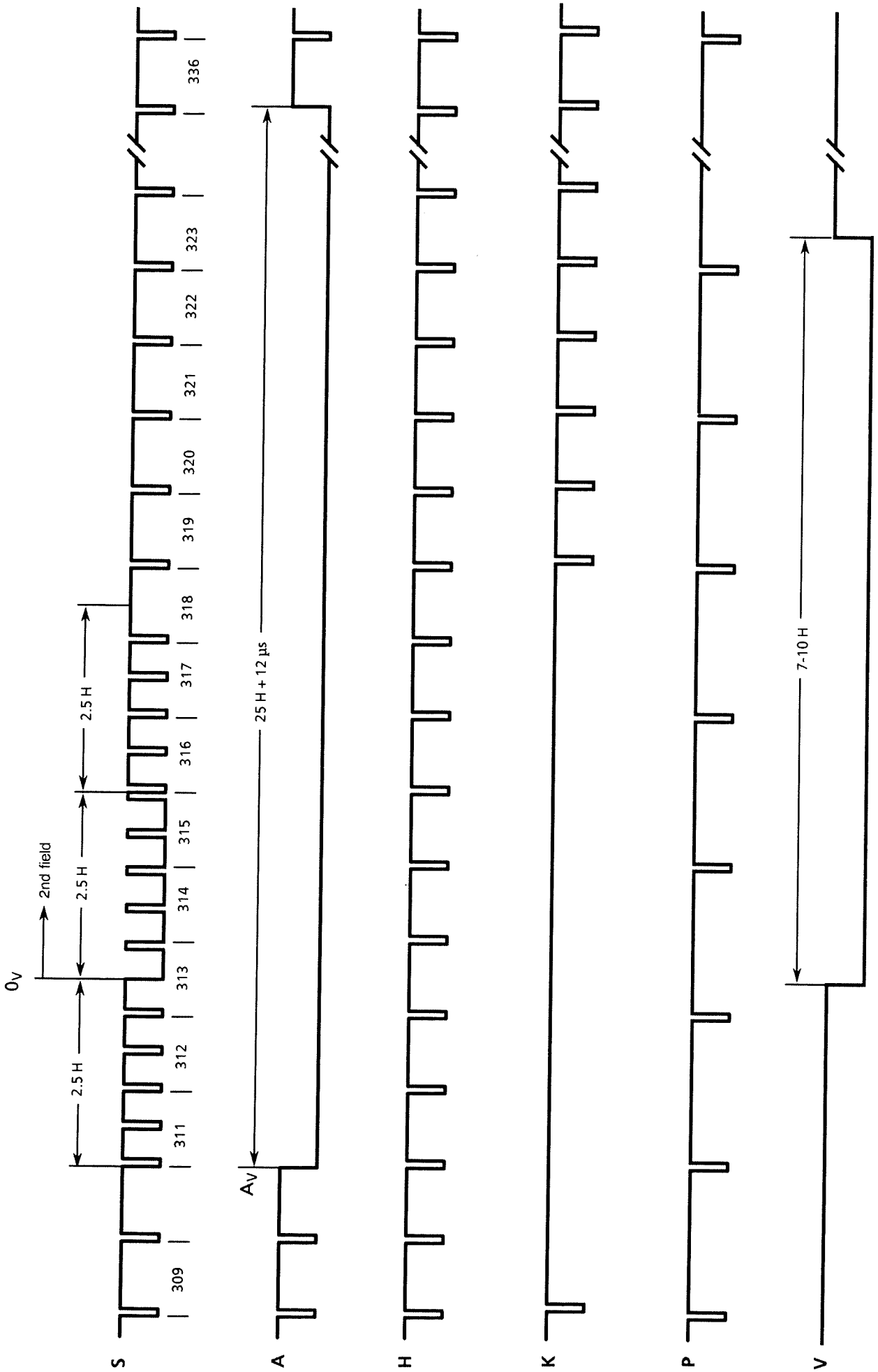

Figure 4 Signal generator signals at the start of the second field

Professional Video Generator VG 1100

OPERATING INSTRUCTIONS

Components Option

GRUNDIG
electronic

2. Operating instructions

2.1 Brief description

In modern studio technology, video signals in component form are being used increasingly, because the well-known Cross-Color and Cross-Luminance disturbances of CVBS format and the bandwidth limitations (partly due to the frequency combing) disappear. To make the evaluation of studio installations possible or easier, the VG 1100 provides special signals for the components technology via the components outputs at the 4 outputs Y, C_B, C_R and S. All outputs (except for S) are adjustable in the amplitude, multiburst can be connected to Y, C_B and C_R, the synchronous impulse is disconnectable on Y and G. Moreover, G, B and R are analogically matricized from the signals Y, C_B, C_R, and made available at three further sockets. Hereby distortions arise at discontinuities (e.g. at color bars) due to the various rise times of Y, C_B, C_R.

2.2 Operation

2.2.1 Calling up test patterns

In addition to the test patterns already available in the basic unit, of which here only the data for the four color bar test patterns are specified especially for the components outputs, several special test patterns are avaliable for the components measuring technique. You will find these with the keys **YC_BC_R 1** and **YC_BC_R 2** (on some devices these keys are also inscribed with **YC_BC_R** and **User Def. 1**). All test patterns are stored here, each up to three levels, switchable with key **etc**. After the key has been pressed, the last test pattern selected from this menu is built up. Afterwards, you may choose a further pattern .

YC_BC_R 1 (with some devices also **YC_BC_R**)

- Mltp 5.8 Multipulse test pattern built on ITS 18 up to a highest frequency of 5.8 MHz
- Mltp EBU Multipulse test pattern in accordance with EBU Tech. 3219 Part 5
- Mltp 20 Multipulse test pattern with 7 modulated 20T pulses with frequencies from 1 MHz to 20 MHz
- etc.
- Bowtie1 Bowtie, operating time measuring signal for measurements between channels
- Bowtie2 Bowtie blurred, for easier evaluation the signal exists in various phase angles
- Coring Noise Coring, test signal for noise suppression

YC_BC_R 2 (with some devices also **User Def. 1**)

- PulSprg Pulse and white bar according to EBU Tech. 3219 Part 5
- nT Puls Pulse test signal with pulses of varying width
- val_Rmp Valid Ramp, ramp with valid signals after crossing over into the GBR format
- val_Stc Valid staircase, steps, otherwise as valRmp
- etc.
- Saegez Sawtooth in Y, C_B and C_R
- Lintr5 Staircase 5-step in Y, C_B and C_R
- Lintr10 Staircase 10-step in Y, C_B and C_R
- sh_Rmp Shallow Ramp, flat ramp with adjustable offset

2.2.2 Amplitude adjustment for component outputs

The adjustment of the signal amplitudes of the component outputs YC_BC_R takes place as for CVBS via the keys **COMPO/CAL**, **CHROMA** and **MULTIB** of the field inscribed with AMPLITUDE. These 3 keys are doubly assigned and therefore must be switched over from mode CVBS to mode YC_BC_R via the Menu CONFIGURATE. To do this, press the key **Signals/Outputs**. The following menu appears:

```
CONFIGURATE
ITS   MB_Marks   Ampl->YCbCr   YCbCr   etc.
```

With the softkey **Ampl→YC_BC_R**, the mode of the attenuator can be switched over from CVBS to YC_BC_R. The active attenuator is indicated in the first line of the display.

```
CONFIGURATE     Attenuator->YCbCr
        Ampl->CVBS
```

With the softkey **Ampl→CVBS** or **Ampl→YC_BC_R**, you have the possibility of switching over between both modi for the attenuator. With the keys **COMPO/CAL**, **CHROMA** and **MULTIB** in the field **AMPLITUDE** you can now call up the attenuators of the components outputs.

For this, the keys **COMPO/CAL** and **CHROMA** are equally assigned. Via these keys you find the separated attenuators for Y, C_B and C_R and the buzzer attenuator for all three outputs. After pressing the key **COMPO/CAL** or **CHROMA,** the last operated attenuator appears (including display of adjustments of other attenuators) unless you have just switched over the mode from CVBS to YC_BC_R. Then, or after repeated pressing of the key **COMPO/CAL** or **CHROMA,** a selection of attenuators appears:

```
XXXXXXXXXXXXX          Ampl.
YCbCr    Y       Cb       Cr       Cal.
```

Select the desired attenuator with the corresponding softkey. The attenuators for Y, C_B and C_R are physically available as well as the attenuator for multiburst (MB) described below. The attenuator for YC_BC_R can be operated via software interface.

Effect of attenuators:

YC_BC_R
All 4 attenuators including multiburst are attenuated simultaneously. If the amplitude ratios to each other were previously changed by the individual attenuators, these ratios remain.

Y, C_B or C_R
Individual attenuators, only the selected output is influenced.

Cal
sets all 4 attenuators of the components card on the standardized output levels.

Amplitude/Multib.
With this key, you select the attenuator for the multiburst signal without subselection. With this amplitude control, you may simultaneously influence multiburst signals on all three outputs, if they are switched on. A separate influence is not possible. In the inspection line area and for the total image representation of the signal ITS 18, the amplitude of the multiburst oscillation is always 60 % of the indicated value or 420 mV for Cal.

Note: For the GBR outputs, there are no attenuators planned. The amplitudes at the GBR outputs result from the matrixing equations from the amplitudes on YC_BC_R.

Note: For multipulse signals up to a modulation frequency of 3 MHz the attenuators have the same effect as for YC_BC_R; with higher frequencies, only subaudio low-frequent parts of the amplitude are affected.

2.2.3 Configuration of the components outputs
You may connect the multiburst signal optionally for outputs Y, C_B and C_R. The standard setting of the device after a reset is: Multiburst on Y on, on C_B and C_R off.

Moreover, you may connect or disconnect the synchronous pulse on Y and G (always simultaneously). This synchronous pulse can also be keyed in by retrofitting two resistors at outputs B and R. (For more detailed information, see 1.1 Installation instructions, option synchronous pulses on B and R)

When pressing the key **Signals/Outputs**, the following menu appears:

```
CONFIGURATE
ITS   MB_Marks   Ampl->YCbCr   YCbCr   etc.
```

By pressing the softkey **YCbCr** you receive the following menu:

```
<On>      <Off>      <Off>          <On>
MB->Y     MB->Cb     MB->Cr         Sync
```

The first line indicates the status of the switch for multiburst at the corresponding output, the second line designates the affected signal. With the assigned softkey, you can change the status; the change is carried out immediately and displayed in the upper line. In the above example the base configuration of the device is represented.

When calling up multipulse test patterns or the FuBK test pattern, the switches are overwritten for multiburst. Via menu YC_BC_R you may change them again; this might, however, result in undefined output states.

Note: The multiburst signal is applied in pairs at Y and G, C_B and B, or C_R and R, each. As a result of this, multiburst is displayed in green color on a RGB monitor as basic setting. You may change this by switching multiburst to all channels.

Professional Video Generator VG 1100

DESCRIPTION,

INSTRUCTIONS ON MEASURING TECHNIQUE

Components Option

GRUNDIG
electronic

4. Description, Instructions on measuring technique

4.1 Multipulse test patterns

By means of multipulse test patterns, the frequency response of group operating time and amplitude can be measured at several points. The measuring points are given by the modulation frequencies of the pulses (see Technical data). The measurement can be carried out as follows:
Operating time error measurement by means of multipulses
Measuring instrument: measuring oscilloscope, > 100 MHz
Measurement setup:

DUT: Device under Test

The outputs of the VG 1100 are connected consecutively to the input of the oscilloscope using top quality 75 Ω cables and loads.
Device configuration VG 1100: Test pattern multipulse, multiburst on all channels.
The ground of the pulses must be checked for distortions. Evaluation in accordance with EBU Tech. 3219 Part 5 S.23 can be carried out (only indicated for 20T envelope curves):
For ground distortions symmetric towards the midpoint the following is valid, if $Y_A + Y_B$ is the peak-to-peak amplitude of the ground distortion and Y_{max} is the the total pulse amplitude opposite to the black value:

$$\Delta\tau = \frac{40T}{\pi} \times \frac{y_A + y_B}{Y_{max}};$$

$$\Delta\tau \approx \frac{y_A + y_B}{Y_{max}} \times 1270\ \text{ns};$$

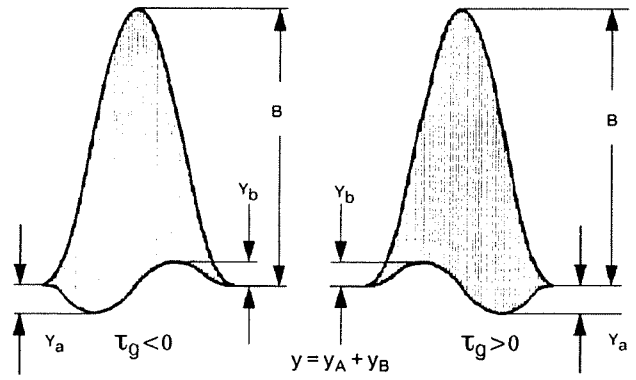

4.2 Bowtie

By means of the Bowtie signal, group operating measurements between the channels can be carried out with simple measuring instruments. Moreover, amplitude errors between the channels become visible. The measurement can be carried out with special wave form monitors for component signals, or similar devices, but also with a high-quality oscilloscope (operating differences between the Y channels < 2 ns, amplitude difference y1 to y2 <1%). The used measuring leads for Y, C_B and C_R must be of the same electrical length (< 1 ns error). A lead of 75 Ω, 0.6 L/3.7 has an operating time of approx. 5 ns/m .
Measuring instrument: Measuring oscilloscope, Δt (y1,y2) < 2 ns
2 phase-adjusted leads
Measurement setup:

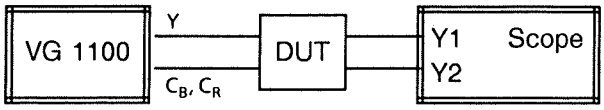

The outputs of the test object are connected to the oscilloscope in pairs.
For measuring, the difference of the luminance channel and a color difference branch is formed and represented on the oscilloscope. Due to the in-phase equality of the oscillations in the picture center, a blurring results which decreases towards the picture edges. This point of blurring is displaced when there are operating time differences. The two markers directly beside the center marker correspond to 5 ns operating time difference, the further markers each 20 ns.

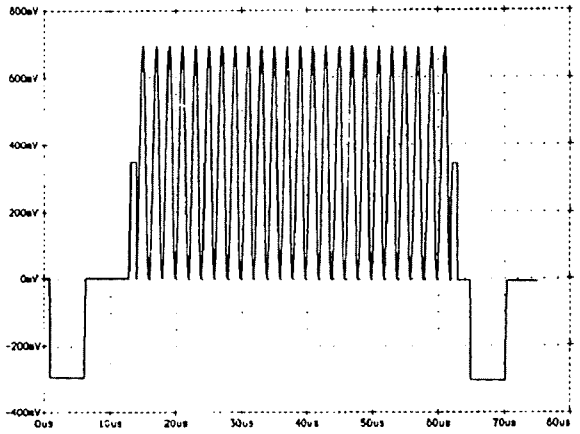

500 kHz in y

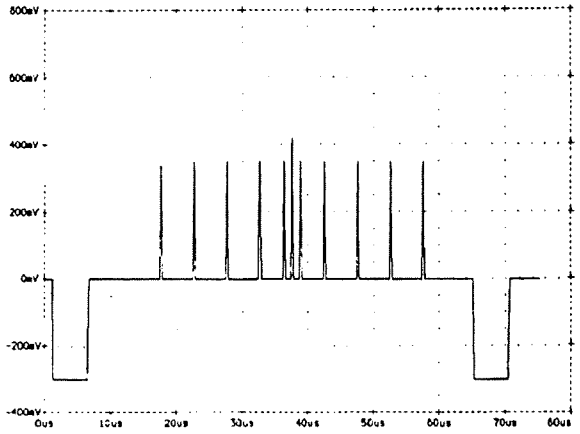

Marker line

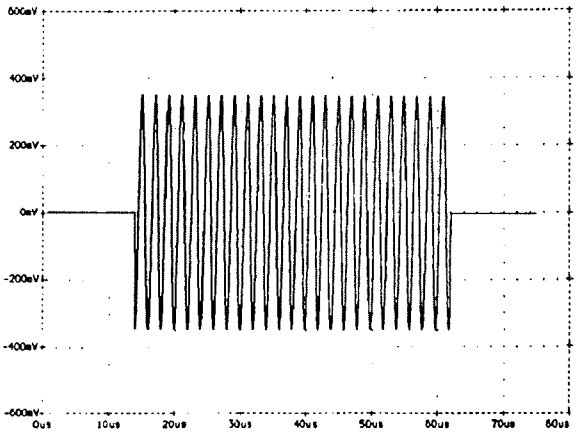

502 kHz in C_B und C_R

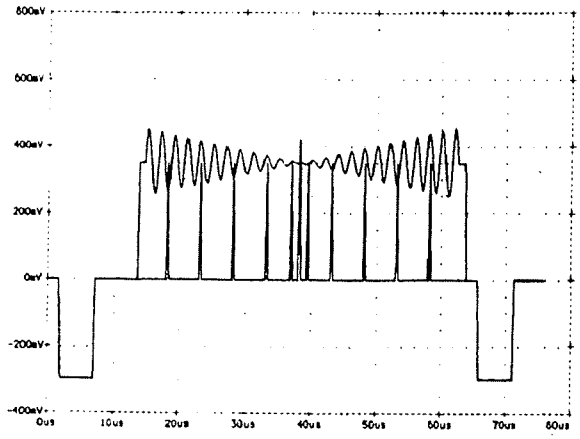

Bowtie, difference picture Y-C_B or Y-C_R

Check the systematic errors by connecting Y to Y2 and C_B, C_R to Y1. With deviations, improve the measurement setup or take the arithmetic average from both measurements.

4.3 Noise coring

Coring is used as noise suppression technique in various cameras and recorders. Coring suppresses small high-frequency noise parts, unfortunately, however, also fine video details. To render the application point of this noise suppression visible, the noise coring test pattern is used.
By comparing the original signal

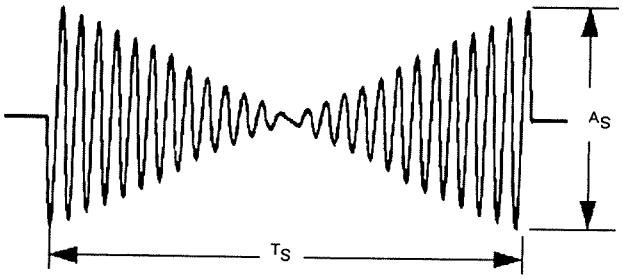

to the changed signal due to noise suppression,

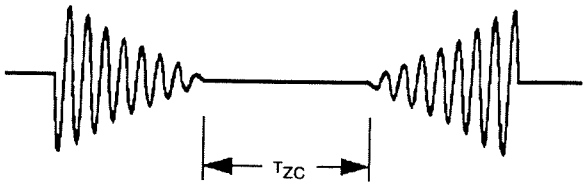

conclusions can be drawn on the amplitude response of the coring circuitry

$$AC = \frac{T_{ZC}}{T_S} \times A_S$$

AC = Amplitude of coring
T_{ZC} = Duration of signal blanking
T_S = Duration of input signal
A_S = Amplitude of input signal

4.4 Valid ramp, valid staircase

With these signals, linearity measurements can be carried out on transcoders of Y, C_B, C_R in GBR formats.
With the extreme values of the ramps following values must result for G,B and R:

Component	1st ramp		2nd ramp		3rd ramp	
Y	0	700	620	80	491	210
CB	0	0	-350	350	118	-118
CR	0	0	57	-57	-350	350
G	0	700	700	0	700	0
B	0	700	0	700	700	0
R	0	700	700	0	0	700

For exact measurements with the level meter, the valid staircase will be used for which you will find all level values, resulting after matrixing in GBR, in the technical data.
For continuous observations the valid ramp in connection with an oscilloscope is more suitable.

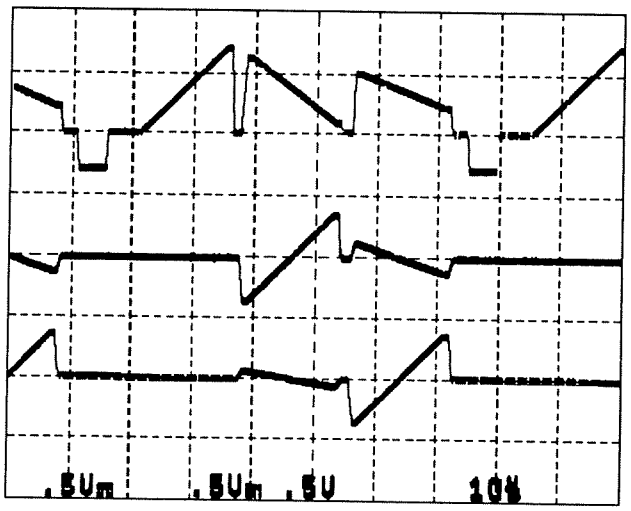

Valid Ramp, Y, C_B, C_R

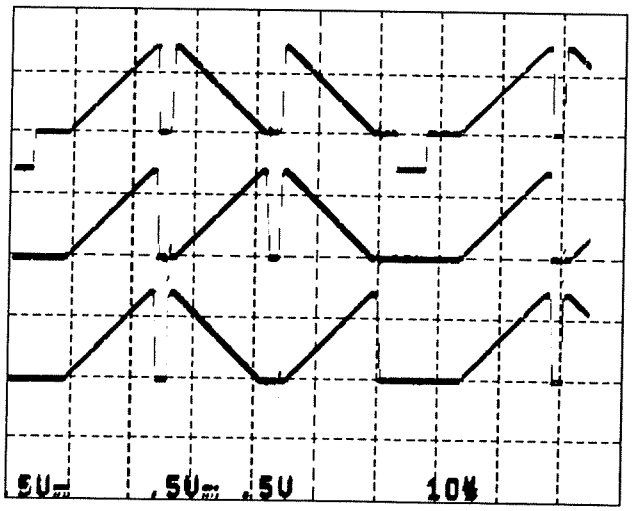

Changed coded valid ramp in GBR

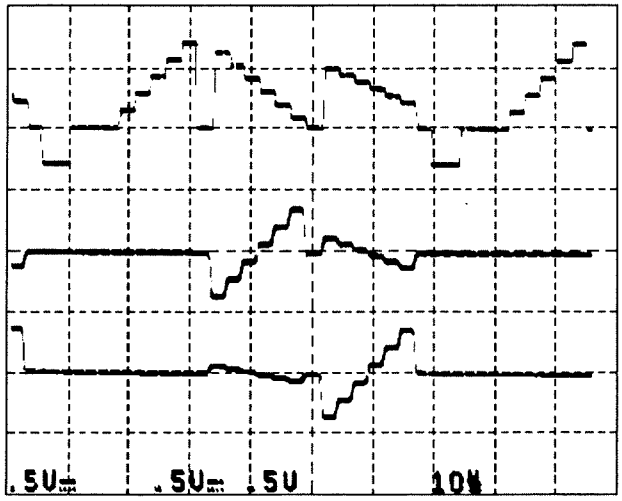

Valid staircase, Y, CB, CR

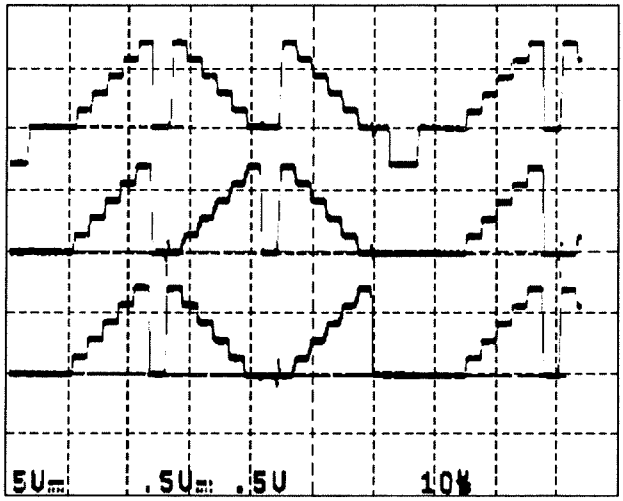

Changed coded valid staircase in GBR

4.5 Shallow ramp

The shallow ramp is an especially flat ramp used to render more clearly visible linearity errors caused by the converter in systems with digital-analog and analog-digital converters (for steep ramps these are often rendered invisible by following filters). The offset of the ramp is adjustable so that the complete control range can be measured. The shallow ramp in VG1100 can be displaced above white value and below black value to render control limits visible. Evaluation is done via a wave form representation on a wave form monitor or an oscilloscope.

The shallow ramp is also used for noise measurements on digital systems. The noise parts due to the system for digital transmission with finite word width cannot be detected with conventional measurements on white or red surfaces, as the quantizing noise is not reproducible here. Rise, start and end time of the shallow ramp are selected especially in a way that the measurement described in the ARD standard specifications (No. 8/1.1 Chap. 1.10.4 Pt. 4.1.6a) is possible with a normal noise measuring instrument.

Professional Video Generator VG 1100

OPERATING INSTRUCTIONS

SECAM Option

GRUNDIG
electronic

2. Operating instructions

2.1 Brief description

Unlike the amplitude-modulated PAL carrier, SECAM uses frequency modulation to transmit color information. The center frequency for the (B-Y) signal is 4250 kHz and for the (R-Y) signal 4406 kHz; both color subcarriers are transmitted separately line-by-line (alternating). The color carrier component that is modulated with the (R-Y) signal is named D_R, and the (B-Y) signal modulated one is named D_B.
This option encodes all test pattern signals of the VG 1100 to the SECAM system. All processing steps needed for that purpose, i.e.

- Pre-emphasis and limiting of the bandwidth of the color difference signals
- Line-frequent changeover of the color difference signals
- Frequency modulation with deviation limiting
- Hf-pre-emphasis (bell-shaped curve)
- Generating the color carrier
- Generating the field identification pulses

are essentially executed by a set of ICs.
The type of color synchronisation (field or line identification) can be selected by a menu after pressing the **SECAM(9)** key.

2.2 Operation

The **SECAM (9)** key switches the VG 1100 to the SECAM standard.
With the thereby activated menu the color synchronization is set. '**L-Ident.**' stands for line-only identification with the reference color carrier oscillation (center frequency of the respective component) starting immediately after the sync-pulse. Field ID pulses in the lines 7-15 and lines 320-328 are being suppressed.
'**L + F-Ident.**' stands for line and field ID where additional trapezoidal color subcarrier pulses with maximum deviation are inserted in lines 7 to 15 and lines 320 to 328.
By pressing the **IDENT OFF** key **(8)** the identification can be switched off completely in order to test the lock reaction of the receiver.
CHROMA (8) completely switches off the chrominance information (only luminance available).

2.3 Direction for use and moderations compared to PAL:

The VG 1100 is designed mainly as a PAL video generator, therefore some special features have to be observed with SECAM:

- The CHROMA-attenuator of the VG 1100 affects the completely coded color signal and not the color components U and V. Because of frequency modulation in the SECAM system this attenuator cannot be used to alter the color saturation. It is, however, possible to check the limiter in the receiver with this attenuator.

- The SECAM color carrier is always existent in the visible video range and also with monochrome test patterns, multibursts, etc. For evaluation of these test signals you may have to switch off the color by pressing the **CHROMA (8)** key.

- With the achromatic fields and the non alternating V-components of some of the test patterns the (R-Y) signal will be inverted from line to line even before the (PAL-) modulator in order to reverse the PAL-switchover. Because of the line alternating transmission of the color components in the SECAM system these test signals are not achromatic or they are not of correct color and they are therefore of no importance for SECAM.

- The modulated 20-T-pulse in insertion test signal 17 and the sawtooth fields in the FuBK test pattern are no longer modulated correctly because of the stable amplitude of the FM-carrier.

- With external synchronization the LED '**SC-LOCK**' is of no importance since a synchronization of the color carriers is not useful because of the frequency modulation. The synchronization of the D_R- and D_B-lines is, however, guaranteed.
- With exception of the field ID signals the color carrier is switched off, during blanking interval.

  Because of this, please note:

  - The insertion test signals have basically no color
  - Avoid insertion of video text lines into the field ID range (line 7-15).

Professional Video Generator VG 1100

OPERATING INSTRUCTIONS

TXT/VPS Option

GRUNDIG
electronic

2. Operating instructions

The option 'TXT/VPS' provides the VG 1100 with the TV special services Teletext and Video Programming System (VPS).

2.1 Operating teletext

With the teletext special service additional digital data are transmitted in some lines of the vertical blanking interval. In a 625 line PAL system this are generally the lines 6 - 22 in the first and 319 - 335 in the second field.

Within the V-blanking range, the VG 1100 provides maximally 6 lines per field to be assigned optionally to teletext. When doing so, the user, however, has to make sure himself that no conflict with other signals in this range occurs (e.g. ITS, VPS line 16, color-frame identification pulse in line 7, field ID pulse with SECAM).

Function of **TXT** key

The following menu appears in the LC-display **(2)** after activating the **TXT** key:

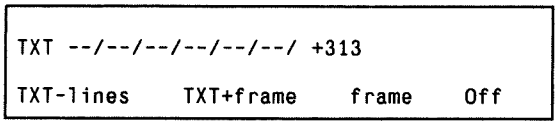

The fade-in mode of the teletext signal can be regulated with the softkeys **(1)**. In this case **TXT-lines** means the fade-in in the television lines determined by **CONFIGURATE PATTERN/SERVICES**, **TXT + frame** also in the visible picture range, "Frame" only in the visible picture range. "Off" interrupts the teletext transmission. The television lines in which teletext is transmitted are shown in the top line of the display.

Determining the lines in the V-blanking interval with teletext data:

The following menu is displayed after activating the **CONFIGURATE PATTERN/SERVICES** key **(3)**:

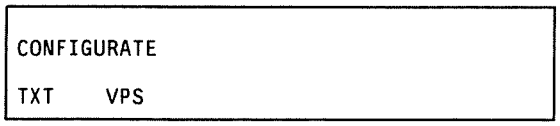

Softkey **TXT** causes the following display:

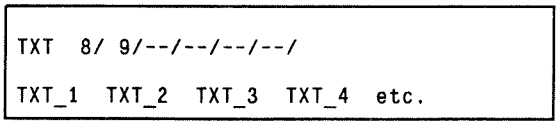

etc. switches to **TXT_5** and **TXT_6**.

The first line of the display shows the momentary assignment of the blanking interval with teletext lines. The corresponding lines of the second field are then also automatically assigned.

After activating a softkey **TXT_1** to **TXT_6** a line number in the range of line 6 to 22 can be assigned to each of the six storage locations via **+** and **-**. **"Off"** clears an entry, **RETURN** leads back again to the higher-level menu.

Setup of the teletext side:

With the VG 1100, as with the teletext service, the date and time is transmitted in the 1st line (heading line) of a teletext page. If the teletext is transmitted in only one line per field, a slight unregularity of the time fade-in in the heading line occurs due to the low transmission rate.

Spare pages:
In the VG 1100, the teletext pages are stored in an EPROM and the user can neither change their content nor their sequence. A number of commonly required test pages, listed in the table of contents page 100, are transmitted. The following pages, among others, are available:

- Various country-specific character sets
  Note: Some teletext decoders, especially older models, can display only one or some few character sets, thus no difference between the various character-sets can be recognized.
- Special page with critical bit pattern for checking the clock synchronization
- Page with automatic fade-in of subtitles
- "Program preview" with VPS information for automatic programming of suitable high-quality video recorders (e.g. Grundig Text Programming). In this mode, the recorder is able to take the VPS time directly from the teletext page.

2.2 Operating VPS

The VPS special service enables correspondingly equipped video recorders to control the automatic recording via the actual broadcasting time of TV programs. To do so, additional digital information is transmitted in line 16 containing the announced broadcasting time and date, as well as the broadcasting station of the actual program. These data do not change even if programs are changed or overrun, thus the recorder can definitely identify the current program.
The VG 1100 permits to optionally program all parameters of four such 'labels' as well as the three special functions 'Status code', 'Blank code' and 'Interruption code' and to switch over between those codes freely to examine the correct functioning of VPS video recorders.

Programming:

The VPS is generally operated in three steps:

- programming of the four optional labels
- determination of the operating mode (only in line 16 or full field)
- choosing of the label which should be broadcast

Programming of the labels:

After pressing key **CONFIGURATE PATTERN/SERVICES (3)** the following menu appears:

```
CONFIGURATE
TXT   VPS
```

Softkey **VPS** causes the following display:

```
VPS
Label 1 Label 2 Label 3 Label 4  etc.
```

etc. displays the system labels **Interruption code**, **Blank code** and **Status code**, which allow to program analogly to the optional labels 1-4 audio, address range, program source and country identification.

If a label is chosen with the respective softkey, a table is displayed on the monitor which is connected to the CVBS output. This table contains all VPS parameters. At the same time you can to read off the actual input line and the functions of the softkeys on the LCD, thus programming without monitor is possible.

label	1				
	1 Exit	2	3	4	5
audio	mono	mono	stereo	2-channel	
U-cert.	Yes	Yes	No		
address range	1	1	2	3	4
day	02	10+	10-	1+	1-
month	12	10+	10-	1+	1-
hour	16	10+	10-	1+	1-
minute	51	10+	10-	1+	1-
progr.source	13	10+	10-	1+	1-
Country ID	D	+	-		

VPS-Information	set status

Softkey-assignment

Lines can be selected with the **variation control (4)** (audio, U-cert., country identification). With the softkeys 2-5 the desired values are input. By pressing **10** the tens' can be switched back and forth, by **1** the ones'. These values appear in column 2 on the screen and in the upper line of the LCD.

By pressing softkey 1 (**Exit**) the programming mode is left.

Definition of the operating mode:

After pressing key **VPS** in the key block **PATTERN (10)** the following menu appears:

```
VPS
L16     L16+frame     frame     Off
```

Via the softkeys it can be selected whether the label should appear only in TV line 16, in frame, in line 16 and frame or not at all. In the operating mode 'Z16 + frame' or 'frame' the VPS signal is shown on the screen until a test pattern key (10) is pressed.

Selecting the desired label:

After pressing key **Label No** in the key block **PATTERN (10)** the following menu appears (the shown data are only examples):

```
1(02.12 16:51)  2(20.10 10:37)  etc.
```

etc. displays the labels three and four, another **etc**. displays the system labels.

Every label is displayed in short manner (label number, date and time). By pressing the respective softkey the label is being broadcast. Thus complicated label sequences can be regenerated to test the correct function of VCRs with VPS.

Example:

Step 1: Label 1

Step 2: Interruption code

Step 3: Label 2

Step 4: Interruption code

Step 5: Label 2

Step 6: Label 1

Step 7: Label 3

A VCR that is programmed on 'Label 1' has to start recording at step 1, to interrupt during steps 2-5, to continue at step 6 and finish at step 7.

Professional Video Generator VG 1100

GENERAL DESCRIPTION

TXT/VPS Option

GRUNDIG
electronic

4. General description

Extract from the ZVEI*) guideline Video Programming System

Coding of the additional VPS information in the words 11 to 14 (of data line 16)

The words 11 to 14 contain the additional VPS information within 32 bits. As program identification (actual value label), the date and time of the announced program beginning as well as the country identification and program source code is transmitted.

Bit 0 and 1 = 2 bit = Identification of address range

Bit 2 to 6 = 5 bit = announced day of broadcasting

Bit 7 to 10 = 4 bit = announced month of broadcasting

Bit 11 to 15 = 5 bit = announced beginning of program, hour

Bit 16 to 21 = 6 bit = announced beginning of program, minute

Bit 22 to 25 = 4 bit = Country identification

Bit 26 to 31 = 6 bit = Program source code (64 coding possibilities for the first and the second address range each)

You will find details on the VPS label data format in Fig. 1.

Address range code

Bit 0 and bit 1 represent the so-called address range code.

Address range code	Bit no. 0	Bit no. 1
1st address range	1	1
2nd address range	1	0
3rd address range	0	1
4th address range	0	0

Coding of the announced beginning of program

The date and time information of the announced program beginning (bit 2 to bit 21) is transmitted in four blocks (day, month, hour, minute). Each block is separately coded binarily, whereby each bit transmitted at first (bit 2, 7, 11, 16) is the MSB (**M**ost **S**ignificant **B**it).

*) ZVEI = Central Organization of German Electrotechnical Industry

Country identification

Four bits are used for country identifiaction (bit 22 = MSB to bit 25 = LSB (**L**ast **S**ignificant **B**it). This coding is ambiguous due to the formation of four frames; in practical use even via satellite, however, it should be possible to exclude confusion by corresponding program source code distributions.

The country identification for Germany is:

Decimal: 13
Hex: D

The entire country identification is shown on page 21 (extract from "Appendix 4 to GT R1 290, 2nd revised version").

Program source code

The idenfication of the program source is coded binarily with bit 25 (MSB) to bit 31 (LSB). Per country identification and address range 64 program sources can be represented.

Special system codes

Instead of the announced program beginning (date and time), special codes can be transmitted to identify certain operational modes. The provided codes are listed in the following and shown in Fig. 1. They contain the usual identifications for address range, country and program source as well as the corresponding unplausible date and time information.

A) System status code

(= Day 0, Month 15, Hour 31, Minute 63)
means that the program source concerned does not broadcast program-related VPS labels although a data line is provided and that recording has to be done in timer mode.
Status code can be output:

- permanently during the introduction phase, as long as a program source does not transmit any labels.
- during the introduction phase as simplified test run for the duration of true-to-schedule broadcasting,
- for a short time in the case of interferences, as long as the program source which normally transmits labels is not able to do so,
- for a short time in special cases during a program which is normally provided with labels, but only within a certain period of time.

B) Space code

(= Day 0, Month 15, Hour 30, Minute 63)
identifies a transmission which has no labels and which is not relevant for recording, as e.g. test patterns or "filling programs" between two programs etc.

C) Interrupt code

(= Day 0, Month 15, Hour 29, Minute 63)
means that an intentional (e.g. intercut election reports) or unintentional (e.g. tear in a film) program interruption has occurred. The recorder "waits" for the interrupted program to be continued. In the case of a program interruption relevant for recording (e.g. news during sockers half time) there might appear an independent label between the short-time interruption code and the continuation of the interrupted label.

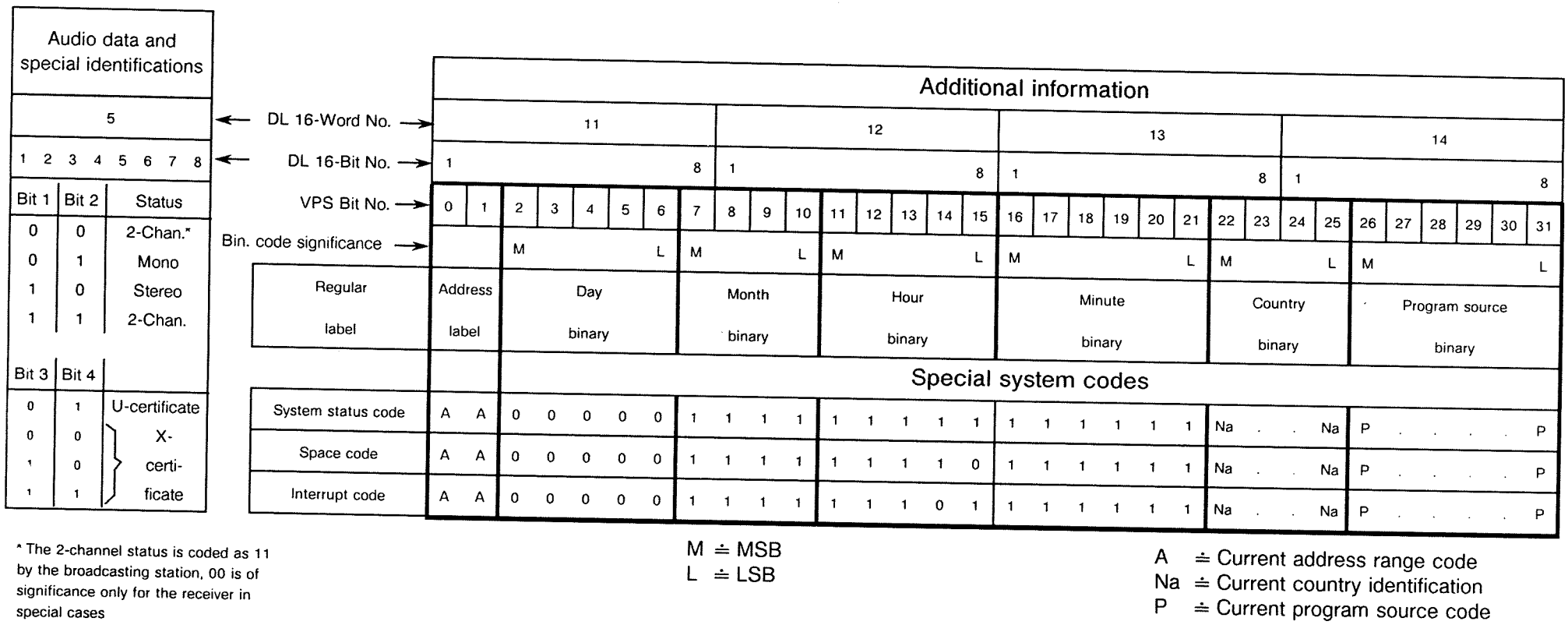

Fig. 1 Data format of the additional information in data line 16

Country Identification

Country	Symbol
Albania	9
Algeria	2
Andorra	3
Austria	A
Belgium	6
Bulgaria	8
Cyprus	2
Czechoslowakia	2
Denmark	9
Egypt	F
Finland	6
France	F
Germany	D
Gibraltar (United Kingdom)	A
Greece	1
Hungary	B
Iceland	A
Iraq	B
Ireland	2
Israel	4
Italy	5
Jordan	5

Country	Symbol
Libya	D
Lebanon	A
Lichtenstein	9
Luxemburg	7
Malta	C
Monaco	B
Morocco	1
Netherlands	8
Norway	F
Poland	3
Portugal	8
Rumania	E
San Marino	3
Spain	E
Sweden	E
Switzerland	4
Syria	6
Tunisia	7
Turkey	3
Union of Soviet Socialist Republics	7
United Kingdom	C
Vatican City State	4
Yugoslavia	6

1	2	3	4	5	6	7	8	9	A	B	C	D	E	F
GR	DZ	AND	IL	I	B	L	BG	AL	A	H	M	D	RO	ET
MA	CY	RSM	CH	JOR	SF	TN	NL	DK	GBZ	IRQ	GB	LAR	E	F
	CS	PL	V		SYR	SU	P	FL	IS	MC			S	N
	IRL	TR			YU				RL					

Professional Video Generator VG 1100

OPERATING INSTRUCTIONS

Option IEEE-488

GRUNDIG
electronic

2. Operation:

2.1 Setting the IEEE-address on VG 1100:

The IEEE-488 bus allows operation of up to 31 units on the same bus. Each unit is provided with an individual address which is set on the VG 1100 as described below:

By pressing key **CONFIGURATE TEXT/TIME (3)** the following menu is displayed in the LCD:

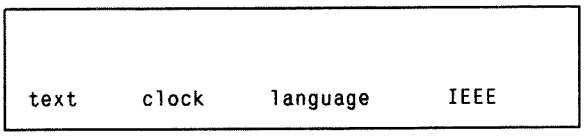

After pressing softkey **IEEE** the address can be set to a value between 0 and 30 via the **rotary switch (4).** The setting menu can be left by pressing any of the test pattern keys. The unit address remains stored even after the VG 1100 has been switched off.

2.2 Meaning of the Status LEDs (15)

- SRQ (service request): indicates that a transmission error is present and that the system controller should inquire status. When doing so, the LED extinguishes.

The five low bits of the status byte describe the cause of error in more detail. Meaning of number

2: incorrect function input
4: the entered numerical value is outside the permitted range

- ADR (addressed): lights up as long as VG 1100 is addressed
- REM (Remote): unit is in remote control operation, the unit keyboard is locked.

The **LOCAL** key **(14)** changes over to operation at the unit.

2.3 Supported interface functions

AH (Acceptor Handshake)
L (Listener)
SR (Service Request)
RL (Remote-Local-Switchover)
DC (Device Clear)
For detailed description of these functions please refer to corresponding literature, e.g. Piotrowski, IEC-Bus, Franzis-Verlag Munich.

2.4 Possible control functions

Software version 5.10 allows remote control of all VG 1100 functions which can be operated via the unit keyboard.

The function for reading out the unit setting into a (floppy disk) file and writing it back to the VG 1100 later on is also new. It allows the simple storage and retrieval of different unit settings as required. The IEEE address is also overwritten during this process, i.e. after reading in, the unit is referred to by the address of the unit the settings were read in from.

Reading out the unit setting:

Issue command to VG 1100 to read out the data to a file (in the case of the National Instruments GPIB-PC controller card 'IBRDF'). The VG 1100 then transfers 1000 bytes, which are subsequently stored in a file. An identifier byte (@) is transmitted and a checksum is created, which is stored together with the data.

Writing back into VG 1100

Issue the 'Status' command and then transfer the stored file to VG 1100.

The VG 1100 checks the identifier byte @ and the checksum contained in the data. If both are correct, the data are transferred into the configuration memory and a power-on reset is executed. Otherwise a general reset is carried out.

Here is a programming example in BASIC for the National Instruments GPIB-PC controller card:

```
100 REM Read out to file named setup.dat
105 REM The variable VG1100% contains the IEEE address of the VG 1100
110 filename$ = "setup.dat"
120 CALL IBDFR (VG1100%,filename$)
200 REM Write back the setting stored in setup.dat
210 einstell$ = "status"
220 CALL IBWRT (VG1100%,einstell$)
230 filename$ = "setup.dat"
240 CALL IBWRTF (VG1100%,filename$)
```

2.4.1 Structure of a command string:

Each string consists of ASCII characters; capital and small letters, even mixed, are permitted. Blanks can be inserted between the words but the total length of a string must not exceed 80 characters. Only one function call is allowed in each string, being terminated by 'CARRIAGE RETURN' (ASCII Code 13) or by 'LINE FEED' (ASCII code 10) or by EOI.

Each command string consists of an abbreviation for the function and the corresponding parameters. The abbreviations are derived from the English display texts and the front panel inscription (functions) of the VG 1100. They are listed in the following table.

Command example:

PAT Grey 40%

Function 'PAT' means pattern. 'Grey 40%' specifies the desired test pattern as parameter, i. e. grey scale 40%
or

Amplsy 250

sets the amplitude of the synchronous pulse to 250 mV.

2.4.2 Table of all IEEE-488 commands and possible parameters

Conventions for parameter description:

< Parameter1; Parameter2; ... >: exactly one of the listed keywords has to be input, e. g. 'ITS on'

< value >: a string, which represents a numerical value within the limits given in brackets [ ]. Numerical variables must first be converted to a string. Example 'Amplchroma 75'.

< nr >: the number of the text, of the VPS label (can also be blank, status or interrupt code) or of the clock. This number must always follow the function call. Example: 'Clock 2 h: Double' (Clock 2 double size) or 'Label status s:13'.

Functions containing < nr > can also transfer several of the listed parameters in a single command string. However, in the case of 'text', the parameter 't:' with the ensuing text characters may only appear at the end of such a sequence of commands. Example: 'Text 2, o:on, b:blank, h:triple, x:20, y:50, t:hello' prints the text 'hello' as text no. 2 in triple-sized letters and in a black text box at screen display position 20, 50.

In the case of functions and test patterns available only in software versions later than 5.10, a corresponding note is included.

Significance	Call	Parameter	
Test pattern commands			
Select test pattern	pat	see table of test pattern calls	
Circle on/off	cir	< on >; < off >	
Color carrier superimposition	sc	< 140 >; < 280 >, < off >	
VPS display mode	vps	< L16 >; < L16 + pict >; < pict >; < off >	
Label selection	vps	< label__1 >; < label__2 >; < label__3 >; < label__4 >; < int__code >; < space__code >; < status__code >	
Teletext display mode	vt	< txt-lines >; < txt + pict >; < pict >; < off >	
Example: setting string = "vt txt-lines"			
Standard switchover			
Color standard	stand	< pal bg >; < pal m >; < pal n >; < ntsc 3.58 >; < ntsc 4.43 >; < sec pict >; < sec line >	
Example: setting string = "stand ntsc 4.43"			
Chroma switchover			
Color carrier on/off	chroma	< on >; < off >	
PAL switchover	chroma	< pal + v >; < pal + –v >	
SECAM Ident	chroma	< ident on >; < ident off >	
Example: setting string = "chroma pal + -V"			
Amplitude setting			
CVBS	amplcvbs	< value >	[0..1270] mV with standards N and B/G [0..1263] mV with standard M
CVB	amplcvb	< value >	[0..889] mV with standards N and B/G [0..901] mV with standard M
VB	amplvb	< value >	[0..889] mV with standards N and B/G [0..901] mV with standard M
SYNC	amplsy	< value >	[0..381] mV with standards N and B/G [0..361] mV with standard M
Chroma	amplchroma	< value >	[0..127] % with standards N and B/G [0..125] % with standard M
Burst	amplburst	< value >	[0..127] % with standards N and B/G [0..125] % with standard M
Chroma + Burst	amplchroma + burst	< value >	[0..127] % with standards N and B/G [0..125] % with standard M
Multiburst picture	amplpict	< value >	[0..127] % with standards N and B/G [0..125] % with standard M
Multiburst ITS	amplits	< value >	[0..127] % with standards N and B/G [0..125] % with standard M
Multib.picture + ITS	amplpict + its	< value >	[0..127] % with standard N and B/G [0..125] % with standard M

Significance	Call	Parameter
Calibration, general	amplcal	
Chroma and Burst	amplchr.cal	
Multiburst	amplmb.cal	
Example: setting string = "amplchroma + burst 100"		
External synchronisation	sy.ext	< on >; < off >
Example: setting string = "sy. ext on"		
Frequency of test pattern Change fixed frequency		
Multiburst fixed frequency	MHz	< value > [0.5..20.0] MHz in steps of 0.1 MHz
Config commands		
Multiburst markers	mb-markers	< 1MHz >; < 2MHz >; < variable >; < off >
...if variable, then	mb-pos	< value > [0 .. 800] with 'SWEEP over line' value* 74 nS = position in line [uS] < value > [0 .. 290] with'SWEEP over field' value = approx. line number

Note:
The function 'Markers' functions only with Multiburst test patterns 'SWEEP over line' and 'SWEEP over field'.
< value > of mb-pos relates to the location of the marker at the screen. Its frequency depends on the test pattern.

Example: setting string = "mb-marker variable"; "mb-pos 30"		
Pulse outputs	Outp. H	< pos-0 >; < 0-pos >; < 0-neg >; < neg-0 >
	Outp. A	< pos-0 >; < 0-pos >; < 0-neg >; < neg-0 >
	Outp. S	< pos-0 >; < 0-pos >; < 0-neg >; < neg-0 >
	Outp. K	< pos-0 >; < 0-pos >; < 0-neg >; < neg-0 >
	Outp. P	< pos-0 >; < 0-pos >; < 0-neg >; < neg-0 >
	Outp. V	< pos-0 >; < 0-pos >; < 0-neg >; < neg-0 >
Ex.: setting string = "outp.k neg-0"		
ITS on/off	Its	< on >; < off >
ITS reference phase	RefPhase	< + 60 >; < + /-60 >
Config ITS Line 17	L17ITS	< off >; < 17 >; < 18 >
Line 18	L18ITS	< off >; < 17 >; < 18 >
Line 19	L19ITS	< off >; < 17 >; < 18 >
Line 330	L330ITS	< off >; < 330 >; < 331 >; < 331a >
Line 331	L331ITS	< off >; < 330 >; < 331 >; < 331a >
Line 332	L332ITS	< off >; < 330 >; < 331 >; < 331a >
Example: setting string = "l331its off"		
SC phase	Phase sc	
internal	int sc	< value > [0 .. 999]
then confirm with	quit	
external	ext sc	< value > [0 .. 999]
H phase	Phase H	
external	H delay	< value > [-100 .. + 100] (always state sign)
Example: setting string = "phasesc"; "intsc 50"; "quit"		
Switch all texts on/off	text	< on >; < off >
Define text number	text < no >	no = [1..15]
Assign text to test pattern	text < no >,	< o:on >; < o:off
Black text box	text < no >,	< b:blank >; < b:no_blank >
Text size	text < no >,	< h:single >; < h:double >; < h:triple >
X coord.	text < no >,	< x:value > [20..98];
Y coord.	text < no >,	< y:value > [30..290];
Text character	text < no >,	< t:desired text > max. 16 characters

Significance	Call	Parameter
Example: Setting string = "text10,o:on,b:no__blank,h:triple,x:30, y:60,t:G r u n d i g"		
Define teletext lines	txt <no> [1..6],	<L:value> [6 .. 22]; <off>
Define VPS label	label <no>,	nr = [1..4]; <interrupt>; <space>; <status>
Audio	label <no>,	<a:mono>; <a:stereo>; <a:2-channel>
U-Certificate	label <no>,	<j:yes>; <j:no>
Address area	label <no>,	<r:value> [1..4]
Date	label <no>,	<d:day,month> day and month in digit form
Time	label <no>,	<c:hour,min> hour and minute in digit form
Program source	label <no>,	<p:value> [0..63]
Country ID	label <no>,	<s:value> [0..15]
Example: Setting string = "label 6,j:yes,r:4,d:27,3,c:11,30,p:15,s:5"		
Assign test pattern to clock	clock	<1>; <2>; <3>; <off>
Clock Set date	clock set,	<d:day,month> day and month in digit form
Set time	clock set,	<c:hour,min> hour and minute in digit form
Example: Setting string = "clock set,d:27,3,c:12,45"		
Configure clock	clock <no>,	no = [1..3]
Clock size	clock <no>,	<h:single>, <h:double>, <h:triple>
X coord.	clock <no>,	<x:value> [20..98];
Y coord.	clock <no>,	<y:value> [30..290]
Example: Setting string = "clock3,h:triple,x:30,y:60"		
Choice of language	language	<german>, <english>
Operation of components card		
Multiburst Y output	comp mby	<on>, <off>
CB output	comp mbcb	<on>, <off>
CR output	comp mbcr	<on>, <off>
Sync	comp sync	<on>, <off>
Amplitude Y + CB + CR	ampl ycbcr	<value> [0..127] %
Amplitude Y	ampl comp y	<value> [0..889] mV
Amplitude CB	ampl comp cb	<value> [0..127] %
Amplitude CR	ampl comp cr	<value> [0..127] %
Amplitude Multib.	ampl comp mb	<value> [0..889] mV
Calibrate	ampl comp cal	
Calibrate Multiburst	ampl comp mb cal	
Example: Setting string = "ampl comp cb 50"		
Special commands		
Power-on reset	RST	corresponds to on/off
General reset	*RST	corresponds to RESET key
Example : Setting string = "*Rst"		
Write to VG 1100 from a file		
	status	
Example: Setting string = "status" followed by a command to write data from a file to the unit. (e.g. CALL IBWRTF (VG1100%,FLNAME%)		

The VG 1100 reacts to the following IEEE universal commands

Example: Output of a command string.

Command	Significance	ASCII CODE
DCL	Reset unit	DC4
LLO	Lock control	DC1
MLA	Own listener address	(optional)
MTA	Own speaker address	(optional)
UNL	End address listener	?
UNT	End address speaker	_
GTL	Local control	SOH
SDC	Reset selected unit	EOT

Command string	Meaning
CMD$ = "?*@" + CHR$(4)	UNL MLA(Adr10) MTA(Adr0) SDC
CALL IBCMD (GPIB0%,CMD$)	

Table of test pattern calls

Test pattern	Parameter after 'pat'
Composite test patterns	
FuBK	fubk
FuBK 16:9 Option Software 6	fubk 16:9
MAZ	maz
Philips	philips
Crosshatch	
19/14	19/14
19/15	19/15
Crosshatch + dots	cr/dots
Dots T01	dots
Crosshatch 16:9 Option Software 6	cr 16:9
Overscan	overscan
Color bar	
100/0/100/0	100/0/100/0
100/0/75/0	100/0/75/0
100/0/100/25	100/0/100/25
75/0/75/0	75/0/75/0
Color flat field	
RED	red
GREEN	green
BLUE	blue
YELLOW	yellow
CYAN	cyan
MAGENTA	magenta
WHITE	white
BLACK	black
Special color	
rev. color bar	cbrev
horizontal color bar	cbhor
Dec.RGB	dec.rgb
15 kHz squarewave	15khz
demodulator test pattern	dem.test
FB_Unb.	cb_uncol
nxTmod.	nxtmod
Sweep U/V	sweep U/V

Test pattern	Parameter after 'pat'
Special signal	
50-Hz-squarewave	50hz
250-kHz-squarewave	250khzT
250-kHz-squarewave + 2T	250khz2T
Blanking 10 µs	blank.10us
Pluge 1	pluge1
Pluge 2	pluge2
Window 1	window1
Window 2	window2
YC_BC_R 1 only useful with option component outputs	
Multipulse 5.8	mltp 5.8
Multipulse EBU	mltp EBU
Multipulse 20	mltp 20
Bowtie 1	bowtie 1
Bowtie 2	bowtie 2
Coring	coring
YC_BC_R 2 only useful with option component outputs	
Pulse step	pulstep
nT pulses	nT pulses
valid Ramp	val_rmp
valid Staircase	val_stc
Saw tooth	ramp
Staircase, 5-step	stairc 5
Staircase, 10-step	stairc 10
sh_Ramp	sh_rmp
Multiburst	
Multiburst- 6MHz	MB6MHz
Multiburst- 20 MHz	MB20MHz
VTR	vtr
Fixed frequency	fix.fr
Sweep Field -10MHz	sweep_F10
Sweep Field -20MHz	sweep_F20
Sweep Line -10MHz	sweep_L10
Sweep Line -20MHz	sweep_L20

Test pattern	Parameter after 'pat'
ITS	
Insertion test signal 17	its17
Insertion test signal 18	its18
Insertion test signal 330	its330
Insertion test signal 331	its331
Insertion test signal 331a	its331a
Insertion test signal ITS 1	its1
Insertion test signal ITS 2	its2
Grey scale	
0% (black)	grey0% or black
10%	grey10%
20%	grey20%
30%	grey30%
40%	grey40%
50%	grey50%
60%	grey60%
70%	grey70%
80%	grey80%
90%	grey90%
100% (white)	grey100% or white
Staircase	
5-step	st5s
7-step	st7s
10-step	st10s
15-step	st15s
10-step horiz.	h10s
Sawtooth	
rising	du/dt +
falling	du/dt-
special	special
sharp	sharp

Professional Video Generator VG 1100

OPERATING INSTRUCTION

Option Test Patterns 16:9

Software 6.xx

GRUNDIG
electronic

Supplements to
tables of test patterns and additional functions

Key	Softkey allocation	
	Menu	Explanation
	FuBK 16:9	Test pattern similar to FuBK converted to 16:9 picture format
	Cr 16:9	Crosshatch with 25 vertical and 15 horizontal lines, 25% grey area in 16:9 format

Professional Video Generator VG 1100

ACCESSORIES

GRUNDIG
electronic

VG 1100 accessories

H.UJ 66-22 **Connection cableL 76**
Coaxial cable, BNC-connectors at both ends, length 1 m
Wave impedance 75 Ω.

H.XL 10-18 BNC connecting piece
Tee-connector for BNC cable

G.UB 30-08 **Front protector hood FH 4**
This rugged plastics cap cover the operating elements and provides in addition enough space for the connection cables.

Forther accessories and specific data can be found in the GRUNDIG-electronic catalog for **Metrology.**

Professional Video Generator VG 1100

TECHNICAL DATA

Basic Unit

PAL / NTSC

GRUNDIG
electronic

Technical data

1. Climatic conditions

1.1	Ambient temperature	
	Operating temperature range	+5°C... +40°C
	Nominal temperature (reference value)	+23°C
	Limits for storage and transport	-25°C... +70°C
1.2	Relative humidity	
	Nominal operating range	20%...80% (without condensation)
1.3	Air pressure	
	Nominal operating range	70...106 kN/m² (up to 2200 m)

2. Mechanical strength

(Vibration test to IEC 68-2-6)

2.1	Test duration	30 minutes
2.2	Peak-to-peak amplitude	0.35 mm
2.3	Frequency range	10 Hz - 55 Hz - 10 Hz
2.4	Rate of frequency change approx.	1 octave per minute

3. Power supply parameters

The power supply conforms to VDE Regulations DIN VDE 0411 T1 10.73/T1a 02.80 and IEC 348 2nd Edition 78, protection class II.

3.1	Mains voltage	220 V (switchable to 110 V or 240 V via voltage selector)
	Nominal operating range	220 V ± 10 % (110 V ± 10 %, 240 V ± 10 %)
3.2	Mains frequency	
	Nominal operating range	45...65 Hz
3.3	Power consumption (without options)	40 VA
3.4	Protection class	II

4. Electromagnetic interference

Conforms to DIN VDE 0871 06.78 and German Regulation No. 163/1984 BPM Vfg. 1046/1984.

5. Mechanical design

5.1	Dimensions	
	Width:	300 mm
	Height:	112.5 mm
	Depth:	227 mm
5.2	Mass:	approx. 8 kg

Unless stated otherwise, the technical data quoted is based on the equipment being terminated by 75 Ω ± 0.1 %, after a warm-up period of approx. 15 minutes.

6.Test patterns

6.1 Combined test patterns

6.1.1 FuBK test pattern

6.1.1.1 Surround

Crosshatch pattern with 19 vertical and 15 horizontal lines which is interrupted by the center field with 10×12 crosshatch fields. Surround has a grey background.

Standard:	PAL B, G, I	PAL N	SECAM	PAL M	NTSC-M
Horizontal lines					
Ampl. (100 %)	700 mV ± 1 %			714.3 mV ± 1 % (100 IRE)	
Visual width	1 l/field			1 l/field	
Vertical spacing	20 H			17 H	
Vertical lines					
Ampl. (100 %)	700 mV ± 1 %			714.3 mV ± 1 % (100 IRE)	
HAD	200 ns ± 10 ns			250 ns ± 12.5 ns	
Period duration	2.7 µs ± 50 ns			2.8 µs ± 50 ns	
Surround with grey background					
Ampl. (25 %)	175 mV ± 1 %			214.3 mV ± 1 % (30 IRE)	
Convergence cross [1]					
Ampl.	700 mV ± 1 %			714.3 mV ± 1 % (100 IRE)	
HAD	200 ns ± 20 ns			250 ns ± 25 ns	
Vertical picture center	line 166			line142	
Horizontal picture center	36.5 µs after neg. sync. edge			35.7 µs after neg. sync. edge	

[1] In center of picture, ± 2 crosshatch fields high, continuous horizontal crosshatch line in center of picture

6.1.1.2 Color bars

Decreasing brightness from white to black

Height of color bar: 3 crosshatch fields

Color bar	PAL B, G, I, N				PAL M	NTSC-M	
	Luminance		Chrominance		Luminance	Chrominance [1]	
	(mV)	%	Ampl. (mV_{pp})	Angle (deg.)	(mV)	Ampl. (mV_{pp})	Angle (deg.)
White	525	(75)	---	---	549.1	---	---
Yellow	465	66.4	470	± 167.1	492.3	444	± 167.1
Cyan	368	52.6	664	± 283.5	401.1	626.3	± 283.5
Green	308	44	620	± 240.7	344.3	585.4	± 240.7
Magenta	216	30.9	620	± 60.7	257.8	585.4	± 60.7
Red	157	22.4	664	± 103.5	201.6	626.3	± 103.5
Blue	60	8.55	470	± 347.1	110.1	444	± 347.1
Black	0	0	---	---	53.6	---	---
Tolerance	± 1 %		± 3 %	± 3°	± 1 %	± 3 %	± 3°

[1] NTSC chrominance angle only positive

6.1.1.3 Grey staircase

5 levels beginning with black (0, 25, 50, 75, 100 %)

Height of grey step: 2 crosshatch fields

Standard:	PAL B, G, I	PAL N	SECAM	PAL M	NTSC-M
White bar ampl.	700 mV ± 1 %			714.3 mV ± 1 % (100 IRE)	
Variation between voltage steps	< ± 1 mV			< ± 1 mV	
Rise time between steps	200 ns ± 20 ns			250 ns ± 25 ns	

6.1.1.4 White-black-white bars with station identification

Height: 1 crosshatch field

Standard:	PAL B, G, I	PAL N	SECAM	PAL M	NTSC-M
White bar ampl.	700 mV			714.3 mV ± 1 % (100 IRE)	
White bar rise/fall time	200 ns ± 20 ns			250 ns ± 25 ns	
White bar width	2.4 crosshatch fields			2.4 crosshatch fields	

6.1.1.5 Station identification

Text can be faded into the black part.

Standard:	PAL B, G, I	PAL N	SECAM	PAL M	NTSC-M
Rise/fall time	140 ns			140 ns	

6.1.1.6 Multiburst

Height: 1 crosshatch field

Frequency: 1 MHz, 2 MHz, 3 MHz, 4.43 MHz

The 4.43 MHz frequency corresponds to the color carrier

Frequency: 1MHz, 2MHz, 3MHz, 3.58MHz

The 3.58 MHz freq. corr. to the col. carrier

Standard:	PAL B, G, I	PAL N	SECAM	PAL M	NTSC-M
Phase angle 4.43 MHz	± 145.9° ± 3°			± 145.9° ± 3°	
Frequency group ampl.	700 mV_{pp} ± 2 %			714.3 mV ± 2 % (100 IRE)	
Luminance ampl.	350 mV ± 1 %			357.2 mV ± 1 % (50 IRE)	
Wave form of freq. group	sinusoidal packets with 50 % grey between packets			sinusoidal packets with 50 % grey between packets	
White bar before freq. group	700 mV ± 1 %			714.3 mV ± 1 % (100 IRE)	

6.1.1.7 White bar with triangular black pulse

Height: 1 crosshatch field

Standard:	PAL B, G, I	PAL N	SECAM	PAL M	NTSC-M
Max. pulse duration	1.4 µs			1.4 µs	
Rise/fall time	140/200 ns			140/250 ns	
White bar ampl.	700 mV ± 1 %			714.3 mV ± 1 % (100 IRE)	

6.1.1.8 Sawtooth with ± V_{BV} modulated color carrier

Height: 1 crosshatch field

Standard:	PAL B, G, I	PAL N	SECAM	PAL M	NTSC-M
Luminance signal	Sawtooth, starting on left at 262.5 mV (37.5 %), constant for 2 crosshatch fields, then falling linearly to zero within 6 crosshatch fields. Superimposed with a color carrier of the same amplitude as the luminance signal at all positions of the sawtooth.			Sawtooth, starting on left at 268 mV (37.5 IRE), constant for 2 crosshatch fields, then falling linearly to 53,6 mV (7.5 IRE) within 6 crosshatch fields. Superimposed with a color carrier of the same amplitude as the luminance signal at all positions of the sawtooth.	
Color phase angle	90°/270° ± 2° alternating			90°/270° ± 2°	90 ° ± 2°

6.1.1.9 Sawtooth with + V_{BU} modulated color carrier

Height: 1 crosshatch field

Standard:	PAL B, G, I	PAL	SECAM	PAL M	NTSC - M
Luminance signal	see ± V_{BV} mod. components				
Color phase angle	0° ± 2°			0° ± 2°	0° ± 2°

6.1.1.10 Achromatic field with + V_{BV} modulated color carrier

Height: 2 crosshatch fields
Width: 2 crosshatch fields

Standard:	PAL B, G, I	PAL	SECAM	PAL M	NTSC-M
Luminance signal	262.5 mV ± 1 %			53,6 mV ± 1 % (7,5 IRE)	
Color phase angle	90° ± 2°			123 ° ± 2 °	
Color amplitude	V_{pp} = 525 mV ± 3 %			V_{pp} = 286 mV ± 3 % (40 IRE)	

6.1.1.11 Achromatic field with ± V_{BU} modulated color carrier

Height: 2 crosshatch fields
Width: 2 crosshatch fields

Standard:	PAL B, G, I	PAL N	SECAM	PAL M	NTSC-M
Luminance signal	262.5 mV ± 1 %			53,6 mV ± 1 % (7,5 IRE)	
Color phase angle	0° / 180° ± 2° alternating			33 ° ± 2 °	
Color ampl.	V_{pp} = 525 mV ± 3 %			V_{pp} = 286 mV ± 3 % (40 IRE)	

6.1.1.12 Circle

Standard:	PAL B, G, I	PAL N	SECAM	PAL M	NTSC-M
Circle signal ampl.	700 mV ± 1 %			703 mV ± 1 % (98,5 IRE)	
Diameter of circle	267 lines = 13.4 crosshatch fields			229 lines = 13.4 crosshatch fields	
Position	symmetrical to center point			symmetrical to center point	
Width of circle at picture center line	approx. 250 ns			approx. 250 ns	
Amplitude drop at picture center	< -5 %			< -5 %	

6.1.2 VTR test pattern

Color bar 100/0/75/0
Height: approx. 2/3 of screen area

Standard:	PAL B, G, I	PAL N	SECAM	PAL M	NTSC-M
Color phase angle/color ampl.	see color bar 100/0/75/0			see color bar 100/0/75/0	
Luminance signal	see color bar 100/0/75/0			see color bar 100/0/75/0	
Red area	approx. 1/3 of screen area			approx. 1/3 of screen area	
Color phase angle/color ampl.	see color red			see color red	
Luminance signal	see color red			see color red	

6.2 Convergence test patterns

6.2.1 19/14 Crosshatch

Standard:	PAL B, G, I	PAL N	SECAM	PAL M	NTSC-M
14 horizontal lines					
Ampl.	700 mV ± 1 %			714.3 mV ± 1 % (100 IRE)	
Visual width	1 l/field			1 l/field	
Vertical spacing	21 H			17 H	
Picture center	center between 7th and 8th crosshatch line (line 166)			center betw. 7th and 8th cr. line (line 142)	
19 vertical lines					
Ampl.	700 mV ± 1 %			714.3 mV ± 1 % (100 IRE)	
Wave form SIN² HAD	200 ns ± 20 ns			250 ns ± 10 ns	
Period duration	2.8 µs ± 50 ns			2.8 µs ± 50 ns	
Horizontal picture center	36.5 µs after neg. sync. edge			35.7 µs after neg. sync. edge	
Grey background	175 mV ± 1 %			214.3 mV ± 1 % (30 IRE)	

6.2.2 19/15 Crosshatch

See crosshatch for FuBK test pattern

6.2.3 Crosshatch/Dots

As for 6.2.1, but additional dots in the center of the squares enclosed by the crosshatch lines

Standard:	PAL B, G, I	PAL N	SECAM	PAL M	NTSC-M
Ampl. of dots	700 mV ± 1 %			714.3 mV ± 1 % (100 IRE)	
Wave form SIN² HAD	200 ns ± 20 ns			250 ns ± 25 ns	

6.2.4 Dots

As for 6.2.3, but without crosshatch

6.2.5 T 01

Not yet provided

6.2.6 Overscan (alignment test pattern)

Vertical and horizontal markers of different sizes for 0, 2, 5 and 10 % overscan, alignment cross, "upper left" identification and white pulses which reach the H blanking interval.

Standard:	PAL B, G, I	PAL N	SECAM	PAL M	NTSC-M
Ampl. of marking lines	700 mV ± 1 %			714.3 mV ± 1 % (100 IRE)	
Alignment cross vertical pos.	36.5 µs			35.7 µs	
horizontal pos.	line 166/167			line 142	

6.3 Color bars

6.3.1 Color bars 100/0/75/0
6.3.2 Color bars 75/0/75/0
6.3.3 Color bars 100/0/100/0
6.3.4 Color bars 100/0/100/25

Color bars	100/0/75/0 PAL B, G, I, N			75/0/75/0 PAL B, G, I, N			100/0/100/0 PAL B, G, I, N			100/0/100/25 PAL B, G, I, N		
	Luminance (mV)	Chrominance Ampl. (mV_{pp})	Chrominance Angle (deg.)	Luminance (mV)	Chrominance Ampl. (mV_{pp})	Chrominance Angle (deg.)	Luminance (mV)	Chrominance Ampl. (mV_{pp})	Chrominance Angle (deg.)	Luminance (mV)	Chrominance Ampl. (mV_{pp})	Chrominance Angle (deg.)
White	700	---	---	525	---	---	700	---	---	700	---	---
Yellow	465	470	±167.1	465	470	±167.1	620	627	±167.1	640	470	±167.1
Cyan	368	664	±283.5	368	664	±283.5	491	885	±283.5	543	664	±283.5
Green	308	620	±240.7	308	620	±240.7	411	827	±240.7	483	620	±240.7
Magenta	216	620	± 60.7	216	620	± 60.7	289	827	± 60.7	392	620	±60.7
Red	157	664	±103.5	157	664	±103.5	209	885	±103.5	332	664	±103.5
Blue	60	470	±347.1	60	470	±347.1	80	627	±347.1	235	470	±347.1
Black	0	---	---	0	---	---	0	---	---	0	---	---
Tolerance	± 1 %	± 3 %	± 3°	± 1 %	± 3 %	± 3°	± 1 %	± 3 %	± 3°	± 1 %	± 3 %	± 3°

Color Bars	100/7.5/77/7.5 PAL M, NTSC-M			77/7.5/77/7.5 PAL M, NTSC-M			100/7.5/100/7.5 PAL M, NTSC-M			100/7.5/100/30.6 PAL M, NTSC-M		
	Luminance (mV)	Chrominance [1] Ampl. (mV_{pp})	Chrominance [1] Angle (deg.)	Luminance (mV)	Chrominance [1] Ampl. (mV_{pp})	Chrominance [1] Angle (deg.)	Luminance (mV)	Chrominance [1] Ampl. (mV_{pp})	Chrominance [1] Angle (deg.)	Luminance (mV)	Chrominance [1] Ampl. (mV_{pp})	Chrominance [1] Angle (deg.)
White	714.3	---	---	549	---	---	714.3	0	---	714.3	---	---
Yellow	492.3	444	±167.1	492.3	444	±167.1	638.3	592	±167.1	657.5	444	±167.1
Cyan	401.1	626.3	±283.5	401.1	626.3	±283.5	516.8	835.1	±283.5	566.3	626.3	±283.5
Green	344.3	585.4	±240.7	344.3	585.4	±240.7	441.4	780.9	±240.7	509.5	585.4	±240.7
Magenta	257.8	585.4	± 60.7	257.8	585.4	± 60.7	325.8	780.9	± 60.7	423	585.4	± 60.7
Red	201.6	626.3	±103.5	201.6	626.3	±103.5	251.1	835.1	±103.5	366.8	626.3	±103.5
Blue	110.1	444	±347.1	110.1	444	±347.1	128.9	592	±347.1	275.3	444	±347.1
Black	53.6	---	---	53.6	---	---	53.6	0	---	53.6	---	---
Tolerance	± 1 %	± 3 %	± 3°	± 1 %	± 3 %	± 3°	± 1 %	± 3 %	± 3°	± 3°		

[1] NTSC chrominance angle only positive

6.4 Single color test patterns

All the colors represented in color bar 100/0/75/0 can be displayed separately over the whole screen.
See 6.3.1 Color Bar 100/0/75/0 for technical data.

6.5 SPECIAL COLOR

Not yet provided

6.6 BLACK / WHITE

6.6.1 50 Hz Transition (60 Hz transition for M standards)

Standard:	PAL B, G, I	PAL N	SECAM	PAL M	NTSC-M
White bar ampl.	700 mV ± 1 %			714.3 mV ± 1 % (100 IRE)	
Start of white bar	line 89			line 77	
White bar height	156 lines			130 lines	
Rise/fall time	200 ns ± 20 ns			250 ns ± 25 ns	
Repetition frequency	50 Hz			60 Hz	

6.6.2 250 kHz rise time T

Vertical bars

Standard:	PAL B, G, I	PAL N	SECAM	PAL M	NTSC-M
Ampl.	700 mV ± 1 %			714.3 mV ± 1 % (100 IRE)	
Rise/fall time	100 ns ± 10 ns			100 ns ± 10 ns	
Repetition frequency	250 kHz ± 5 %			250 kHz ± 5 %	
Pulse duty factor	2 : 1			2 : 1	

6.6.3 250 kHz rise time 2T

Vertical bars

Standard:	PAL B, G, I	PAL N	SECAM	PAL M	NTSC-M
Ampl.	700 mV ± 1 %			714.3 mV ± 1 % (100 IRE)	
Rise/fall time	200 ns ± 20 ns			250 ns ± 25 ns	
Repetition frequency	250 kHz ± 5 %			250 kHz ± 5 %	
Pulse duty factor	2 : 1			2 : 1	

6.6.4 Pluge signal

Two vertical stripes are closely arranged to each other on the left side of the screen, serving to adjust the porch level. On the right side of the screen a bar is displayed which is divided into equally dimensioned areas of different brightness.

Standard:	PAL B, G, I	PAL N	SECAM	PAL M	NTSC-M
Stripes for adjusting black					
Height of stripes	208 lines			175 lines	
Position ultra black	21.1 µs			21.1 µs	
Position dark grey	25.7 µs			25.7 µs	
Duration of stripes	2.3 µs			2.3 µs	
Ampl. ultra black	- 14 mV			25 mV (3.5 IRE)	
Ampl. dark grey	+ 14 mV			82 mV (11.5 IRE)	
Ampl. black	0 mV			53.6 mV (7.5 IRE)	
White area 100 %					
Graded grey bar					
Height of entire bar	208 lines			175 lines	
Height of one bar area	52 lines			44 lines	
Position of bar	39.5 µs			39.5 µs	
Duration of bar	11.6 µs			11.6 µs	
Ampl. white area	700 mV ± 1 %			714.3 mV ± 1 % (100 IRE)	
Ampl. 1st grey area	450 mV ± 1 %			478.4 mV ± 1 % (67 IRE)	
Ampl. 2nd grey area	200 mV ± 1 %			242.6 mV ± 1 % (34 IRE)	
Ampl. 3rd grey area	110 mV ± 1 %			157.3 mV ± 1 % (22 IRE)	

6.7 SPECIAL Y C_B C_R

Not yet provided

6.8 USER DEF 3

Not yet provided

6.9 MULTIBURST

6.9.1 Frequency packets of 0.5/1/2/3/4/5/6 MHz
6.9.2 Frequency packets of 1/3/5/7/10/15/20 MHz
6.9.3 Frequency packets of 0.5/2/3/3.5/4/4.5/5 MHz

Technical data for frequency packets 6.9.1 to 6.9.3.

Standard:	PAL B, G, I	PAL N	SECAM	PAL M	NTSC-M
Luminance signal	350 mV ± 1 %			357.2 mV ± 1 % (50 IRE)	
Frequency group ampl.	V_{pp} = 700 mV			V_{pp} = 714.3 mV (100 IRE)	
Wave form	sinusoidal packets with 50 % white between packets. Each frequency group begins and ends with a zero-axis crossing			sinusoidal packets with 50 % white between packets. Each frequency group begins and ends with a zero-axis crossing	
Frequency response error	± 2 % up to 6 MHz ± 5 % up to 20 MHz			± 2 % up to 6 MHz ± 5 % up to 20 MHz	
Harmonic interval	> 40 dB up to 6 MHz > 30 dB up to 20 MHz			> 40 dB up to 6 MHz > 30 dB up to 20 MHz	
Frequency deviation	± 5 %			± 5 %	
Reference white line at beginning of field Position	line 24/25 + 2nd field			line 21/22 + 2nd field	
Ampl.	700 mV ± 1 %			714.3 mV ± 1 % (100 IRE)	

6.9.4 Fixed frequencies

Not yet provided

6.9.5 SWEEP over field of 0.5 MHz...10 MHz
6.9.6 SWEEP over field of 1 MHz...20 MHz

Technical data for 6.9.5/6.9.6 SWEEP over field.

Standard:	PAL B, G, I	PAL N	SECAM	PAL M	NTSC-M
Luminance signal	350 mV ± 1 %			357.2 mV ± 1 % (50 IRE)	
Frequency group ampl.	V_{pp} = 700 mV			V_{pp} = 714.3 mV (100 IRE)	
Wave form	sinusoidal			sinusoidal	
Frequency response error	±2 % up to 6 MHz ±5 % up to 20 MHz			±2 % up to 6 MHz ±5 % up to 20 MHz	
Harmonic interval	>40 dB up to 6 MHz >30 dB up to 20 MHz			>40 dB up to 6 MHz >30 dB up to 20 MHz	
White pulse at start of line Start	10.5 µs			9.41 µs	
Duration	2 µs			2 µs	
Ampl.	700 mV ± 1 %			714.3 mV ± 1 % (100 IRE)	

6.9.7 SWEEP over line of 0.5 MHz...10 MHz
6.9.8 SWEEP over line of 1 MHz...20 MHz

Technical data for 6.9.7/6.9.8 SWEEP over line.

Norm:	PAL B, G, I	PAL N	SECAM	PAL M	NTSC-M
Luminance signal	350 mV ± 1 %			357.2 mV ± 1 % (50 IRE)	
Frequency group ampl.	V_{pp} = 700 mV			V_{pp} = 714.3 mV (100 IRE)	
Wave form	sinusoidal			sinusoidal	
Frequency response error	±2 % up to 6 MHz ±5 % up to 20 MHz			±2 % up to 6 MHz ±5 % up to 20 MHz	
Harmonic interval	>40 dB up to 6 MHz >30 dB up to 20 MHz			>40 dB up to 6 MHz >30 dB up to 20 MHz	
Reference white line at beginning of field. Position	line 24/25 + 2nd field			line 21/22 + 2nd field	
Amplitude	700 mV ± 1 %			714.3 mV ± 1 % (100 IRE)	

6.9.9 Marker fade-In

The following markers can be selected via the CONFIGURATE SIGNALS/OUTPUTS menu:
- markers at 1 MHz spacing
- markers at 2 MHz spacing
- variable markers, a marker can be moved as required within the frequency range of 0.5 MHz...20 MHz using the VARIATION control. The frequency is shown in the display and the resolution of the marker faded in is 100 kHz.

6.10 ITS (insertion test signals)

The reference point for position information is the negative sync. edge (0_H)

6.10.1 ITS 17

Line 17

Standard:	PAL B, G, I	PAL N	SECAM	PAL M	NTSC-M
White bar (B2)					
Position pos. edge	12 µs (6 H/32)			11.9 µs (24 H/128)	
neg. edge	22 µs (11 H/32)			24.8 µs (50 H/128)	
White bar amplitude	700 mV ± 1 %			714.3 mV (100 IRE)	
Rise/fall time	200 ns ± 20 ns			140 ns	
Sine square pulse (B1)					
Peak position	26 µs (13 H/32)			33.8 µs (68 H/128)	
Amplitude	within ± 1 % of white bar B2			within ± 1 % of white bar B2	
Half-amplitude width	200 ns ± 10 ns			250 ns ± 12.5 ns	
Combined 20 T pulse (F)					
Peak position	32 µs (16 H/32)			37.2 µs (75 H/128)	
Amplitude	within ± 1 % of white bar B2			innerhalb ± 1 % des Weißbalkens B 2	
Half-amplitude width	2 µs ± 60 ns			1.57 µs ± 50 ns	
Baseline distortion	< 1 %			< 1 %	
Superimposed color phase (switchable to ± 60° via CONFIGURATE SIGNALS/OUTPUTS menu)	60 ° ± 5 °			same as burst	
Staircase 5-steps (D1)					
Step positions	40 µs (20 H/32)			45.6 µs (20 H/32)	
	44 µs (22 H/32)			48.6 µs (22 H/32)	
	48 µs (24 H/32)			51.6 µs (24 H/32)	
	52 µs (26 H/32)			54.6 µs (26 H/32)	
	56 µs (28 H/32)			57.6 µs (28 H/32)	
	62 µs (31 H/32)			61.6 µs (31 H/32)	
Amplitude (white)	within ± 1 % of white bar B2			643 mV ± 1 % (90 IRE)	
Ampl. of voltage steps	1/5 (140 mV) of white bar B2			1/5 (128 mV) of staircase peak value	
Deviation between voltage steps	< ± 1 mV			< ± 1 mV	
Rise time of steps	200 ns ± 20 ns			250 ns ± 25 ns	
Chrominance signal superimposed on staircase D2 (only M-standards)					
Start				41.7 µs (48 H/128)	
End				60.7 µs (122 H/128)	
Ampl. (V_{pp})				286 mV ± 2 % (40 IRE)	
Envelope rise/fall time				approx. 400 ns	
Phase difference				0.3 °	
Gain difference				0.5 %	
Color phase superimpos.				same as burst	

6.10.2 ITS 18

White reference oscillation (C1)

Line 280

Standard:	PAL B, G, I	PAL N	SECAM	PAL M	NTSC-M
Position pos. edge	12 µs (6 H/32)			11.9 µs (24 H/128)	
neg. edge	16 µs (8 H/32)			15.9 µs (32 H/128)	
pos. edge	20 µs (10 H/32)				
Amplitude (white part)	560 mV ± 1 %			714.3 mV ± 1 % (100 IRE)	
Amplitude (black part)	140 mV ± 1 %				
Luminance contrast for frequency group	350 mV ± 1 %			357.2 mV ± 1 % (50 IRE)	
neg. edge	62 µs (31H/32)			61.6 µs (124H/128)	

Frequency packets (C2) on luminance contrast

Standard: PAL B, G, I PAL N SECAM			PAL M NTSC-M	
Burst No	**Start point**	**Frequency (MHz)**	**Start point**	**Frequency (MHz)**
1	12 H/32	0.5	36 H/128	0.5
2	15 H/32	1	48 H/128	1
2	18 H/32	2	56 H/128	2
4	21 H/32	4	64 H/128	3
5	24 H/32	4.8	72 H/128	3.58
6	27 H/32	5.8	80 H/128	4.2

Standard:	**PAL B, G, I PAL N SECAM**	**PAL M NTSC-M**
Amplitude (V_{pp})	420 mV ± 2 %	357.2 mV ± 2 % (50 IRE)
Harmonic interval	> 40 dB	> 40 dB
Start/Stop phase	0°	0°
Frequency deviation	± 5 %	± 5 %
Superimposed 3-level chrominance signal (G) (only M-standards)		
Transition positions		45.6 µs (92H/128)
		49.6 µs (100 H/128)
		53.6 µs (108 H/128)
		59.6 µs (120 H/128)
Ampl. (U_{pp})		
1st bar		143 mV ± 1 % (20 IRE)
2nd bar		286 mV ± 1 % (40 IRE)
3rd bar		572 mV ± 1 % (80 IRE)
Envelope rise/fall time		approx. 400 ns
Superimposed color phase		same burst

The gap between frequency groups is not shorter than 0.4 µs and not longer than 2 µs.

6.10.3 ITS 1 (Not yet provided)

6.10.4 ITS 2 (Not yet provided)

5.10.5 ITS 330

Standard:	PAL B, G, I	PAL N	SECAM	PAL M	NTSC-M
White bar (B2)					
Position pos. edge	12 µs (6 H/32)				
neg. edge	22 µs (11 H/32)			not used	
White bar amplitude	700 mV ± 1 %				
Rise/fall time	200 ns ± 20 ns				
2 T sine square pulse (B1)					
Peak position	26 µs (13 H/32)				
Amplitude	within ± 1 % of white bar B2				
Half-amplitude width	200 ns ± 10 ns				
Staircase 5-steps (D1)					
Transition positions	40 µs (20 H/32)				
	44 µs (22 H/32)				
	48 µs (24 H/32)				
	52 µs (26 H/32)				
	56 µs (28 H/32)				
	62 µs (31 H/32)				
Amplitude (white)	within ± 1 % of white bar B2				
Ampl. of voltage steps	1/5 (140 mV) of white bar B2				
Deviation between voltage steps	< ± 1 mV				
Rise time of steps	200 ns ± 20 ns				
Color carrier superimposed on grey staircase signal					
Start	30 µs (15 H/32)				
End	60 µs (30 H/32)				
Amplitude (Vpp)	280 mV ± 2 %				
Envelope rise/fall time	ca. 1 µs				
Phase difference	< 0.3°				
Gain difference	< 0.5 %				
Superimposed color phase (switchable to ± 60° via CONFIGURATE SIGNALS/OUTPUTS menu)	60° ± 5°				

6.10.6 ITS 331

Standard:	PAL B, G, I	PAL N	SECAM	PAL M	NTSC-M
Luminance contrast					
Start	12 µs (6 H/32)				
End	62 µs (31 H/32)			not used	
Amplitude	350 mV ± 1 %				
Rise/fall time	200 ns ± 20 ns				
Superimposed chrominance bar (G1)					
Position start	14 µs (7 H/32)				
end	28 µs (14 H/32)				
Amplitude (V_{pp})	700 mV ± 1 %				
Envelope rise/fall time	ca. 1 µs				
Superimposed color reference carrier (E)					
Start	34 µs (17 H/32)				
End	60 µs (30 H/32)				
Amplitude (V_{pp}) Phase difference of superimposed color carriers ITS 330 to line 331	< 2°				

6.10.7 ITS 331-a

As for 331, but with 3-level chrominance bar (G2) instead of chrominance bar (G1).

Standard:	PAL B, G, I	PAL N	SECAM	PAL M	NTSC-M
Transition positions	14 µs (7 H/32)				
	18 µs (9 H/32)				
	22 µs (11 H/32)				
	28 µs (14 H/32)				
Amplitude (V_{pp})					
1st bar	140 mV ± 1 %				
2nd bar	420 mV ± 1 %				
3rd bar	700 mV ± 1 %				

6.11 GREY

Grey areas as frame signals

Standard:	PAL B, G, I	PAL N	SECAM	PAL M	NTSC-M
Grey selectable from 0...100 % in 10 % steps					
Amplitude	set grey level ± 1 %			set grey level ± 1 %	
Rise/fall time	200 ns ± 20 ns			250 ns ± 25 ns	
Start grey level	10.5 µs			9.4 µs	
End grey level	62.5 µs			62 µs	

6.12 USER DEF 2

Not yet provided

6.13 Staircase

6.13.1 5-step staircase

Vertical staircase signal with 5 steps from black to white.

Standard:	PAL B, G, I	PAL N	SECAM	PAL M
White bar amplitude	700 mV ± 1 %			714.3 mV ± 1 % (100 IRE)
Voltage step amplitude	1/5 (140 mV) of white bar			1/5 (143 mV) of white bar
Deviation between voltage steps	< ± 1 mV			< ± 1 mV
Voltage step rise time	200 ns ± 20 ns			250 ns ± 25 ns

6.13.2 7-step staircase

Vertical staircase signal with 7 steps from black to white.

Standard:	PAL B, G, I	PAL N	SECAM	PAL M
White bar amplitude	700 mV ± 1 %			714.3 mV ± 1 % (100 IRE)
Voltage step amplitude	1/7 (100 mV) of white bar			1/7 (102 mV) of white bar
Deviation between voltage steps	< ± 1 mV			< ± 1 mV
Voltage step rise time	200 ns ± 20 ns			250 ns ± 25 ns

6.13.3 10-step staircase

Vertical staircase signal with 10 steps from black to white.

Standard:	PAL B, G, I	PAL N	SECAM	PAL M
White bar amplitude	700 mV ± 1 %			714.3 mV ± 1 % (100 IRE)
Voltage step amplitude	1/10 (70 mV) of white bar			1/10 (71 mV) of white bar
Deviation between voltage steps	< ± 1 mV			< ± 1 mV
Voltage step rise time	200 ns ± 20 ns			250 ns ± 25 ns

6.13.4 15-step staircase

Vertical staircase signal with 15 steps from black to white.

Standard:	PAL B, G, I	PAL N	SECAM	PAL M
White bar amplitude	705 mV ± 1 %			720 mV ± 1 %
Voltage step amplitude	1/15 (47 mV) of white bar			1/15 (48 mV) of white bar
Deviation between voltage steps	< ± 1 mV			< ± 1 mV
Voltage step rise time	200 ns ± 20 ns			250 ns ± 25 ns

6.13.5 10-step horizontal staircase

Horizontal staircase signal starting with white at beginning of picture and decreasing to black.
(Test signal to VDE 860 for measuring interference radiation for monitors and TV receivers).

Standard:	PAL B, G, I	PAL N	SECAM	PAL M
White bar amplitude	700 mV ± 1 %			714.3 mV ± 1 % (100 IRE)
Voltage step amplitude	1/9 (70 mV) of white bar			1/9 (79 mV) of white bar
Deviation between voltage steps	< ± 1 mV			< ± 1 mV
Vertical height between voltage steps	29 lines			24 lines

6.14 SAWTOOTH

6.14.1 Rising sawtooth (dv/dt +)

Standard:	PAL B, G, I	PAL N	SECAM	PAL M	NTSC-M
Start sawtooth (rising)	(7H/32)			(24 H/128)	
Stop sawtooth	(30H/32)			(114 H/128)	
Stop constant part	(31H/32)			(124 H/128)	
Sawtooth amplitude/ constant part	700 mV ± 1 %			714.3 mV ± 1 % (100 IRE)	
Linearity	< ± 0.2 % TV			< ± 0.2 % TV	

6.14.2 Falling sawtooth (dv/dt -)

Standard:	PAL B, G, I	PAL N	SECAM	PAL M	NTSC-M
Start constant part	(6H/32)			(24 H/128)	
Start sawtooth (falling)	(7H/32)			(28 H/128)	
Stop sawtooth	(31H/32)			(30H/128)	
Sawtooth amplitude/ constant part	700 mV ± 1 %			714.3 mV ± 1 % (100 IRE)	
Linearity	< ± 2 % TV			< ± 2 % TV	

6.14.3 Special

Sawtooth falling from black to sync. area, then constant, and then rising to 100 % white.

Standard:	PAL B, G, I	PAL N	SECAM	PAL M	NTSC-M
Transition positions					
falling part from	(8H/32)			(28 H/128)	
to	(9H/32)			(32 H/128)	
constant part from	(9H/32)			(32 H/128)	
to	(11.5H/32)			(42 H/128)	
rising part from	(11.5H/32)			(42 H/128)	
to	(26.5H/32)			(120 H/128)	
constant part from	(26.5H/32)			(120 H/128)	
to	(31H/32)			(124 H/128	
Sawtooth amplitude/ constant part	700 mV ± 1 %			714.3 mV ± 1 % (100 IRE)	
Amplitude of ultra black part	-120 mV ± 1 %			-122 mV ± 1 % (17 IRE)	

6.15 + Sc (subcarrier)

Additional function for 6.13 and 6.14, superimposed color carrier for staircase and sawtooth signals.

6.15.1 + Sc 140 mV

Standard:	PAL B, G, I	PAL N	SECAM	PAL M	NTSC-M
Amplitude of superimposed color carrier (V_{pp})	140 mV ± 2 %			143 mV ± 2 % (20 IRE)	
Color phase (switchable to ± 60° via CONFIGURATE SIGNALS/OUTPUTS menu)	+ 60° ± 3°			same as burst	
Phase difference	< 0.3°			< 0.3°	
Gain difference	< 0.5 %			< 0.5 %	
Start superimposing	(6.5 H/32)			(26 H/128)	
Stop superimposing	(30.5 H/32)			(122 H/128)	

6.15.2 + Sc 280 mV

Standard:	PAL B, G, I	PAL N	SECAM	PAL M	NTSC-M
Amplitude of superimposed color carrier (V_{pp})	280 mV ± 2 %				
Color phase (switchable to ± 60° via CONFIGURATE SIGNALS/OUTPUTS menu)	+ 60° ± 5°			same burst	
Phase difference	< 0.3°			< 0.3°	
Gain difference	< 0.5 %			< 0.5 %	
Start superimposing	(6.5 H/32)			(26 H/128)	
Stop superimposing	(30.5 H/32)			(122 H/128)	

6.16 USER DEF 3

Not yet provided

6.17 VPS (VIDEO PROGRAMMING SYSTEM)

The content of the data line can be blanked into:

1) line 16
2) line 16 and frame
3) frame only
4) switched off.

The data line content can be configured via the CONFIGURATE PATTERNS/SERVICES menu.

6.18 VPS LABEL

The labels (max. 4) which can be configured via the CONFIGURATE PATTERNS/SERVICES menu plus the following labels

1) interrupt code
2) blanking code
3) status code

can be directly called up.

6.19 TXT (Teletext)

The content of the teletext memory can be blanked into:

1) the TXT lines pre-programmed in the CONFIGURATE PATTERNS/SERVICES menu
2) the TXT lines pre-programmed in the menu plus into the frame
3) into the frame only
4) switched off.

6.20 Circle

The circle can be switched on and off for each test pattern.

Standard:	PAL B, G, I	PAL N	SECAM	PAL M	NTSC-M
Ampl.	700 mV ± 1 %			703 mV (98.5 IRE)	
Circle diameter	267 lines			229 linmes	
Width of circle in center of pattern ($\sin^2$ form)	approx. 250 ns			approx. 250 ns	

6.21 Additional functions

6.21.1 CHROMA ON/OFF

Complete color can be switched on and off.

6.21.2 PAL + V

PAL phase alternation can be switched off, only + V vector represented.

6.21.3 IDENT OFF

The line and field ID is switched on and off in conjunction with the SECAM option.

7. Signals

7.1 Color subcarrier

Standard:	PAL B, G, I	PAL N	SECAM	PAL M	NTSC - M
Color subcarrier frequency	4433618.75 Hz ± 5 Hz	3582056.25 Hz ± 5 Hz		3575611.49 Hz ± 5 Hz	3579545 Hz ± 5 Hz
Coupling f_{SC} =	$(1135/4 + 1/625)\ f_H$	$(917/4 + 1/625)\ f_H$		$(909/4)\ f_H$	$(455/2)\ f_H$
Temperature drift	$< \pm 1 \times 10^{-6}$ thermostatic control	$< \pm 1 \times 10^{-6}$ thermostatic control		$< \pm 1 \times 10^{-6}$ thermostatic control	$< \pm 1 \times 10^{-6}$ thermostatic control
Burst phase	±135° ±1°	±135° ±1°		±135° ±1°	180° ±1°
Burst amplitude (V_{pp})	300 mV ±3 %	300 mV ±3 %		286 mV ±3 %	286 mV ±3 %
Burst position	5.6 µs ±0.1 µs after neg. sync. edge	5.6 µs ±0.1 µs after neg. sync. edge		5.8 µs ±0.1 µs after neg. sync. edge	5.3 µs ±0.1 µs after neg. sync. edge
Burst width	2.25 µs ±0.23 µs = 10 ± 1 oscillations	2.51 µs ±0.28 µs = 9 ± 1 oscillations		2.51 µs ±0.28 µs = 9 ± 1 oscillations	2.51 µs ±0.28 µs = 9 ± 1 oscillations
Burst blanking	9 H	9 H		11 H	9 H
Field 4-1	line 623-6	line 623-6		523-8	1-9
1-2	310-318	310-318		260-270	264-273
2-3	622-5	622-5		522-7	1 -9
3-4	311-319	311-319		259-269	264-273
SC-H-phase	0° ± 20°	0° ± 20°			
Jitter	<3°	<3°			
Identification of 8th field	white pulse line 7	white pulse line 7		white pulse line 7	
Start of pulse	12 µs after sync.	12 µs after sync.		12 µs after sync.	
Pulse width	10 µs	10 µs		10 µs	
Pulse ampl.	700 mV +0mV / -200 mV	700 mV +0mV / -200 mV		714.3 mV +0mV / -200 mV	

7.2 Blanking and synchronization signals

Standard:	PAL B, G, I	PAL N	SECAM	PAL M
Line frequency (coupled to color carrier)	15625 Hz ±1 ×10 -6			15734.264 Hz ±1 ×10 -6
Sync. pulse width	4.7 µs ±0.2 µs			4.7 µs ±0.2 µs
Sync. pulse ampl.	300 mV ±1 %			286 mV ± 1 %
Line blanking	12 µs ±0.3 µs			10.9 µs ±0.2 µs
Front porch	1.5 µs			1.49 µs
Field frequency	50 Hz line interlacing			60 Hz line interlacing
Field sync. signal				
No. of pre/post equalizing pulses	5			6
Equalizing pulse width	2.35 µs ±0.1 µs			2.3 µs ±0.1 µs
No. of vertical interrupt pulses	5			6
Interrupt pulse width	4.7 µs ±0.2 µs			4.7 µs ±0.2 µs
Vertical blanking	25 H +12 µs			20 H + 10.9 µs

8. External synchronization

8.1 Input requirements

Standard:	PAL B, G, I	PAL N	SECAM	PAL M	NTSC-M
Type of signal	CVBS or black burst				
Input voltage	0.5-2 V_{pp}				
Input sockets	2 × BNC looped through				
Return loss	> 30 dB up to 7 MHz				

8.2 Synchronization parameters for color carrier

Standard:	PAL B, G, I	PAL N	SECAM	PAL M	NTSC-M
Capture range	± 50 Hz			± 50 Hz	
Sync. locking time	< 1 s			< 1 s	
Jitter referred to ext. burst	< 1°			< 1°	
Color carrier shift range (set via menu and VARIATION control)	> 360°			> 360°	
Smallest shift range (resolution)	0.5°			0.5°	

8.3 Synchronization parameters for sync. signal

Standard:	PAL B, G, I	PAL N	SECAM	PAL M	NTSC-M
Capture range referred to line frequency	± 3 %				
Sync. locking time	< 1 s				
Jitter referred to ext. sync.	< 10 ns				
Sync. signal shift range (set via menu and VARIATION control)	± 2.5 µs				
Smallest shift range (resolution)	25 ns				

8.4 Synchronization parameters for 8 V (only **PAL B, G, I, N**)

1st field ID: Sc-H-phase < ± 20 °

9. Output signals

9.1 Color carrier output

Standard:	PAL B, G, I	PAL N	SECAM	PAL M	NTSC-M
Output	BNC rear panel socket	BNC rear panel socket		BNC rear panel socket	
Output impedance	75 Ω	75 Ω		75 Ω	
Return loss	> 25 dB up to 7 MHz	> 25 dB up to 7 MHz		> 25 dB up to 7 MHz	
Output voltage	2 V_{pp} ± 10 %	2 V_{pp} ± 10 %		2 V_{pp} ± 10 %	

9.2 Black burst output

Standard:	PAL B, G, I	PAL N	SECAM	PAL M	NTSC-M
Output	3 × BNC rear panel sockets			3 × BNC rear panel sockets	
Output impedance	75 Ω ± 1 %			75 Ω ± 1 %	
Return loss	> 30 dB up to 15 MHz			> 30 dB up to 15 MHz	
Output signal	sync. + burst + 8 V identification pulse in line 7			sync. + burst	
Output voltage					
Sync.	300 mV ± 5 %			300 mV ± 5 %	
Burst	V_{pp} = 300 mV ± 5 %			V_{pp} = 286 mV ± 5 %	
8 V-pulse	700 mV - 10 %			700 mV	no id. pulse available
Sync. rise/fall time	200 ns ± 20 ns			200 ns ± 20 ns	

9.3 COMPOSITE OUTPUT (CVBS)

Standard:	PAL B, G, I	PAL N	SECAM	PAL M	NTSC-M
Output	3 × BNC rear panel sockets				
Output impedance	75 Ω ± 1 %				
Return loss	> 30 dB up to 15 MHz				

9.3.1 Output voltage (calibrated)

Standard:	PAL B, G, I	PAL N	SECAM	PAL M	NTSC-M
VB component (100 %)	700 mV ± 1 %			714.3 mV ± 1 % (100 IRE)	
Sync.	- 300 mV ± 1 %			- 286 mV ± 1 %	
Sync. rise/fall time	200 ns ± 20 ns			200 ns ± 20 ns	
Burst amplitude	300 mV ± 3 %			286 mV ± 3 %	
Front/back porch	0 V ± 0.1 V			0 V ± 0.1 V	
Frequency response (CAL.)					
up to 6 MHz	± 2 %			± 2 %	
up to 20 MHz	± 5 %			± 5 %	

9.3.2 Output voltages variable via menu and VARIATION control

Standard:	PAL B, G, I	PAL N	SECAM	PAL M	NTSC-M
Attenuator for CVBS, CVB, VB					
VB setting range (100 % = CAL)	1 % ... 127 % (7 mV ... 889 mV)				
Resolution	1 %-steps (= 7 mV)				
Linearity	± 1.5 % of calibrated value				
Attenuator for SYNC.					
SYNC. setting range (-43 % = CAL)	- 1 % ... - 55 % (- 7 mV ... - 381 mV)				
Resolution	0.43 %-steps (= 3 mV)				
Linearity	± 1.5 % of calibrated value				
Attenuator for CHROMA, BURST, BURST + CHROMA					
Setting range (100 % = CAL)	1 % ... 127 %				
Resolution	1 %-steps				
Linearity	± 1.5 % of calibrated value				
Attenuator for multiburst ITS, multiburst video, multiburst ITS and video					
Setting range (100 % = CAL)	1 % ... 127 %				
Resolution	1 %-steps (= 7 mV)				
Linearity	± 1.5 % of calibrated value				

9.4 Y/C OUTPUT (S-VHS Output)

9.4.1 Y Output BNC rear panel socket (luminance)

Standard:	PAL B, G, I	PAL N	SECAM	PAL M	NTSC-M
Output impedance	75 Ω ± 1 %			75 Ω ± 1 %	
Output voltage (CAL)					
VB component	700 mV ± 3 %			714.3 mV ± 3 %	
Sync.	- 300 mV ± 3 %			-286 mV ± 3 %	
Front/back porch	0 V ± 0.1 V			0 V ± 0.1 V	
Frequency response					
up to 6 MHz	± 4 % ± 15 % (up to unit no. 1050)			± 4 % (up to unit no. 1050)	

The attenuators for VB, SYNC. and multiburst also affect the Y output.

9.4.2 C Output BNC Backplane Socket (Chrominance)

Standard:	PAL B, G, I	PAL N	SECAM	PAL M	NTSC-M
Output impedance	75 Ω ± 1 %			75 Ω ± 1 %	
Return loss	> 30 dB up to 15 MHz			> 30 dB up to 15 MHz	
Output voltage (CAL)					
Burst	V_{pp} = 300 m V ± 5 %			V_{pp} = 286 m V ± 5 %	
Color amplitude	dependent on picture content			dependent on picture content	

The attenuator for CHROMA also affects the C output.

9.5 Pulse outputs

9.5.1 Horizontal pulse (H)

Standard:	PAL B, G, I	PAL N	SECAM	PAL M	NTSC-M
Pulse duration	7 µs ± 0.2 µs			7 µs ± 0.2 µs	
Period	64 µs (H)			63.555 µs (H)	
Internally selectable: B(H) signal					
Pulse width	12 µs ± 0.3 µs			10.9 µs ± 0.3 µs	
Leading edge	1.5 µs before sync.			1.49 µs before sync.	

9.5.2 Blanking pulse (B)

Standard:	PAL B, G, I	PAL N	SECAM	PAL M	NTSC-M
H blanking pulse	12 µs ± 0.3 µs			10.9 µs ± 0.3 µs	
V blanking pulse	25 lines + 12 µs			20 lines ± 10.9 µs	

9.5.3 Sync. signal (S)

Standard:	PAL B, G, I	PAL N	SECAM	PAL M	NTSC-M
Pulse duration	4.7 µs ± 0.2 µs			4.7 µs ± 0.2 µs	
Equalizing pulse	2.35 µs ± 0.1 µs			2.3 µs ± 0.1 µs	
V interrupt pulse	4.7 µs ± 0.2 µs			4.7 µs ± 0.2 µs	
No. of main pulses	5			6	
No. of pre/post equalizing pulses	5/5			6/6	

9.5.4 Burst identification pulse (K)

Standard:	PAL B, G, I	PAL N	SECAM	PAL M	NTSC-M
Pulse duration	2.25 µs ± 0.23 µs			2.51 µs ± 0.28 µs	2.51 µs ± 0.28 µs
Position of pulse referred to leading edge of sync. pulse	5.6 µs ± 0.1 µs			5.8 µs ± 0.1 µs	5.3 µs ± 0.1 µs
Burst blanking	9 H				
Field 4-1	line 623-6			line 523-8	line 1-9
1-2	310-318			260-270	264-273
2-3	622-5			522-7	1-9
3-4	311-319			259-269	264-273

9.5.5 PAL identification pulse (P)

Standard:	PAL B, G, I	PAL N	SECAM	PAL M	NTSC - M
Pulse duration	4.7 µs ± 0.2 µs			4.7 µs ± 0.2 µs	not
Period	2 H			2 H	provided
Pulseactive	burst phase + 135°			burst phase +135°	
Internally selectable: H/2 signal					
Pulse duration	1 H			1 H	
Periode	2 H			2 H	
Pulse positiv	burst phase + 135°			burst phase +135°	

9.5.6 Vertical pulse (V)

Standard:	PAL B, G, I	PAL N	SECAM	PAL M	NTSC-M
Pulse duration	640 µs (10 H)			635.555 µs (10 H)	
Period	20 ms (field)			16.667 ms (field)	
Position	at start of each main equalizing pulse			at start of each main equalizing pulse	
Internally selectable: 1) V/25 pulse					
Pulse duration	16 µs			16 µs	
Period	40 ms (frame)			33.33 ms (frame)	
Position	line 622			line 1	
2) 8V-pulse					
Pulse duration	10 µs			10 µs	not
Period	8 fields			8 fields	provided
Position	line 7 / 1. field			line 7 / 1. field	
3) Picture pulse					
Pulse duration	20 ms			16.67 ms (field)	
Period	40 ms			33.33 ms (picture)	
Pulse positive	during odd field			during odd field	

Technical data for pulse outputs 9.5.1 - 9.5.6

Output	1×BNC socket per pulse output
Output impedance	75 Ω
Return loss	> 20 dB up to 4 MHz
Output voltage	V_{pp} = 2 V ± 10 %
Rise/fall time	170 ns

9.5.7 Additional pulse outputs

Two additional pulse amplifiers can be supplied with pulses H, B, B(H), S, K, P, V, V/25, 8 V or frame pulse. The audio outputs are then not available.
The polarity and voltage state (0 towards positive or 0 towards negative) can be freely configured for each output via the CONFIGURATE SIGNALS/OUTPUTS menu.

9.5.8 AUDIO OUTPUT

Outputs	2 BNC sockets
Frequency AUDIO 1	1024 Hz ± 0.1 %
AUDIO 2	512 Hz ± 0.1 %
Output impedance	600 Ω
Output voltage (internally adjustable up to 1 V_{rms}/600 Ω)	0.5 V_{rms}/600 Ω
Distortion	< 0.1 %

Alterations and errors reserved

Professional Video Generator VG 1100

TECHNICAL DATA

Components Option

GRUNDIG
electronic

3. Technical data

3.0 General

The following data are valid for all test patterns of the VG 1100 including the components' test patterns:

Output		Y, C_B, C_R	G, B, R
Amplitude at least		± 1 % ± 3 mV	± 2 % ± 7 mV
Multiburst	up to 6 MHz up to 20 MHz	± 2 % ± 5 %	± 3 %* ± 7 %*

* for output G there is the restriction that multiburst must be disconnected on C_B/B, C_R/R.

The 50 % points for simultaneous steps on Y and C_B, C_R are a maximum of 40 ns apart. For Bowtie see there.

3.1 Color bar test patterns

Decreasing brightness from white to black

Temporal arrangement of components (the same for all color bar test patterns):

Time/µs	Color bars
from 10.9	White
17.4	Yellow
23.8	Cyan
30.2	Green
36.7	Magenta
43.1	Red
49.5	Blue
55.9	Black

Amplitudes of components SMPTE / EBU, 625 Z / 50 Hz

75/0/75/0	Y[mV]	C_B[mV]	C_R [mV]	G[mV]	B[mV]	R[mV]
White	525	0	0	525	525	525
Yellow	465	-262	43	525	0	525
Cyan	368	89	-263	525	525	0
Green	308	-174	-220	525	0	0
Magenta	217	174	220	0	525	525
Red	157	-89	263	0	0	525
Blue	60	262	-43	0	525	0
Black	0	0	0	0	0	0

100/0/100/0	Y[mV]	C_B[mV]	C_R [mV]	G[mV]	B[mV]	R[mV]
White	700	0	0	700	700	700
Yellow	620	-350	57	700	0	700
Cyan	491	118	-350	700	700	0
Green	411	-232	-293	700	0	0
Magenta	289	232	293	0	700	700
Red	209	-118	350	0	0	700
Blue	80	350	-57	0	700	0
Black	0	0	0	0	0	0

100/0/75/0	Y[mV]	C_B[mV]	C_R [mV]	G[mV]	B[mV]	R[mV]
White	700	0	0	700	700	700
Yellow	465	-262	43	525	0	525
Cyan	368	89	-263	525	525	0
Green	308	-174	-220	525	0	0
Magenta	216	174	220	0	525	525
Red	157	-89	263	0	0	525
Blue	60	262	-43	0	525	0
Black	0	0	0	0	0	0

100/0/100/25	Y[mV]	C_B[mV]	C_R [mV]	G[mV]	B[mV]	R[mV]
White	700	0	0	700	700	700
Yellow	640	-262	43	700	175	700
Cyan	543	89	-263	700	700	175
Green	483	-174	-220	700	175	175
Magenta	392	174	220	175	700	700
Red	332	-89	263	175	175	700
Blue	235	262	-43	175	700	175
Black	0	0	0	0	0	0

3.2 Multipulse test patterns

A significant signal on G, B or R is only possible for all multipulse test patterns if the amplitude of C_B and C_R has been set to zero. The signals on G, B and R then correspond to those on Y.
If ITS 18 is blanked in, its multiburst packets have an amplitude of 700 mV_{pp}, which is different to standard.

YC_BC_R 1 Multipulse MItp5.8

Test pattern description
Multipulse test pattern under the influence of ITS 18. Number, place, amplitude and frequency of the multiburst packet as in ITS 18, however similar to 20T in ITS 17 as modulated 20T sinusoidal square pulses (1st pulse 40T)

Application
Frequency response and operating time, and especially in recorder systems due to the multipulse amplitude reduced to 60 %.

Technical data
Component Y

Standard:	EBU 625/50		
Reference white pulse rise time of edges	200 ns		
Position pos. edge	12 µs		
Amplitude white	420 mV		
Position neg. edge	20 µs		
Amplitude black	0 mV		
Multipulse packet, envelope curve, sinusoidal square with 20T, (1st pulse 40T) on black, amplitude at peak:	0 mV 420 mV		

Multipulse packet, envelope curve, sinusoidal square with 20T, (1st pulse 40T) on black
Frequency

MP No	Position peak	EBU 625/50		
1	26 µs	0.5 MHz		
2	32 µs	1.0 MHz		
3	38 µs	2.0 MHz		
4	44 µs	4.0 MHz		
5	50 µs	4.8 MHz		
6	56 µs	5.8 MHz		

Components C_B,C_R

Standard:	EBU 625/50		
Reference white pulse rise time of edges	500 ns		
Position pos. edge	12 µs		
Amplitude	210 mV		
Position neg. edge	16 µs		
Amplitude	-210 mV		
Multipulse packet, envelope curve, sinusoidal square with 20T, (1st pulse 40T) on amplitude at the peak Pos. and frequencies of pulses as for Y	-210 mV 210mV		

YC_BC_R 1 Multipulse MltpEBU

Test pattern description

Multipulse test pattern according to EBU Tech 3219 Part 5 Final Draft Page 22ff comprising reference bars and five pulses modulated with varying frequencies.

Application

Measurements of the group operating time via the frequency

Technical data

Component Y

Standard:	EBU 625/50		
Reference white pulse rise time of edges	200 ns		
Position pos. edge	12 µs		
Amplitude white	700 mV		
Position neg. edge	20 µs		
Amplitude black	0 mV		
Multipulse packet, envelope curve, sinusoidal square with 20T on black amplitude at peak:	0 mV 700 mV		

Position and amplitude of pulses

MP No	Position peak	EBU 625/50		
1	25 µs	1.0 MHz		
2	33 µs	2.0 MHz		
3	41 µs	3.0 MHz		
4	49 µs	4.0 MHz		
5	57 µs	4.5 MHz		

Components C_B,C_R

Norm:	EBU		
Reference pulse rise time of edges	500 ns		
Position pos. edge	12 µs		
Amplitude	350 mV		
Position neg. edge	16 µs		
Amplitude	-350 mV		
Multipulse packets, envelope curve, sinusoidal square with 40T for pulse No 1 and with 20T for pulses 2 to 5, on amplitude at peak:	- 350 mV 350 mV		

Position and amplitude of pulses

MP No	Position peak	EBU 625/50		
1	23 µs	0.5 MHz		
2	33 µs	1.0 MHz		
3	41 µs	1.5 MHz		
4	49 µs	2.0 MHz		
5	57 µs	2.5 MHz		

YC_BC_R 1 Multipulse Mltp 20

Test pattern description
Multipulse test pattern comprising reference bars and seven pulses modulated with varying frequencies, frequencies as for multiburst packet up to 20MHz

Application
Measurements of group operating time via the frequency

Technical data
Components Y

Standard:	EBU 625/50		
Rise time of edges	200 ns		
Reference white lines	24, 25, 336, 337		
Position pos. edge	12 µs		
Amplitude white	700 mV		
Position neg. edge	62 µs		
Amplitude black	0 mV		
Multipulse lines: Multipulse packets, envelope curve, sinusoidal square with 20 T on black amplitude at peak:	 0 mV 700 mV		

Position and frequencies of pulses

MP No	Position peak	EBU 625/50		
1	16 µs	1 MHz		
2	23 µs	3 MHz		
3	30 µs	5 MHz		
4	37 µs	7 MHz		
5	44 µs	10 MHz		
6	51 µs	15 MHz		
7	58 µs	20 MHz		

Standard:	EBU 625/50		
Components C_B,C_R Rise time of edges	500 ns		
Reference white line	24, 25, 336, 337		
Position pos. edge	12 µs		
Amplitude	350 mV		
Position neg. edge	62,5 µs		
Amplitude	0 mV		
Multipulse lines: Multipulse packets, envelope curve, sinusoidal square with 20T on amplitude at peak:	-350 mV +350 mV		

Position and frequencies of pulses as for Y

3.3 Bowtie test patterns

YC_BC_R 1 Bowtie1

Test pattern description

One quarter of the test pattern consists of lines with sinus oscillations of constant amplitude and constant frequency, 500kHz in Y, 502 kHz in C_B and C_R; 2 quarters consist of marker lines in which 2T pulses are stored in Y as the measuring marks for oscilloscope representation; one quarter consists of lines with sinusoidal oscillations exactly as in the first quarter.

Application

Operating time measurements between the luminance channel and the color difference channels as well as relative amplitude errors.

For the measurement, the difference from the luminance channel and a color difference branch is formed and represented on the oscilloscope. Owing to the equality of phase of the oscillations in the pattern center, a blurring results which is decreased towards the pattern edges. This point of blurring is displaced in case of operating time differences. The two markers directly beside the middle marker correspond to 5 ns ± 0.2 ns operating time difference, the further markers each 20 ns ± 0.2 ns.

Technical data

Standard:	EBU 625/50		
Lines and	23-94 336-407		
Component Y: sinusoidal oscillation 500 kHz, Amplitude	700 mV_{PP}		
Setup	350 mV		
Components C_B,C_R: sinusoidal oscillation 502 kHz Amplitude	700 mV_{PP}		
Setup	0 mV		

Phase angle of all three oscillations equal in center of pattern

Standard:	EBU		
Lines and	95-238 408-551		
Component Y: Component Y: In center of pattern (36.5 µs after the negative synchronous edge) a 2T pulse with 420 mV amplitude, symmetrically at a distance of 1.25 µs one each of a 2T pulse with 350 mV amplitude symmetrical to center of pattern at an interval of 5µs to each other over the entire line further 2T pulses with 350 mV amplitude			
Components C_B,C_R: constant black level			
Line and as lines 23 - 94	239-310 552-623		

Exactness of blurring: typical ±2ns, max: ±5ns

YC_BC_R 1 Bowtie2

Test pattern description
Pattern structure and description as Bowtie1 but sinusoidal oscillations phase displaced from line to line by 40° each time. This results in a periodicity of 9 lines.

Application
The better distinction of the envelope curve facilitates the oscilloscopal evaluation

Technical data see Bowtie 1

3.4 Pulse and step test patterns

YC_BC_R 2 Pulse step test pattern PulSprg

Test pattern description
The test pattern consists of a line represented over the whole picture with a 2T pulse, one 10µs and one 25µs white bar

Application
Measuring of video level and pulse tilt

Technical data

Standard:	EBU 625/50	EBU 625/50		
Time [µs]	Y [mV]	C_B [mV]	C_R [mV]	
from	0	0	0	
12 µs	0	-350	-350	
Pulse	2T	5T	5T	
15 µs	Position of peak	Position of peak	Position of peak	
19 µs begin of white bar 10 µs	700	350	350	
29 µs end of white bar 10 µs	0	-350	-350	
33 µs begin of white bar 25 µs	700	350	350	
58 µs end of white bar 25 µs	0	-350	-350	
62.5 µs	0	0	0	
Rising times of steps	200 ns	500 ns	500 ns	

YC_BC_R 2 n*T Pulse nT Puls

Test pattern description

The test pattern consists of a line in full frame display representation which contains $\sin^2$ pulses of varying width

Application

Frequency response measurements

Technical data

The times indicated refer to the vertex of the impulses.

Standard:	EBU 625/50	EBU 625/50		
Time [µs]	Y [mV]	C_B [mV]	C_R [mV]	
from	0	0	0	
10.5 Step to	0	-350	-350	
Amplitude at the peak of pulse	700	350	350	
15.5	10T	20T	20T	
19.5	8T	10T	10T	
23.5	5T	8T	8T	
27.5	3T	5T	5T	
30.5	2T	3T	3T	
33.5	1.5T	2T	2T	
36.5 Step to	700	350	350	
Amplitude at the peak of pulse	0	-350	-350	
39.5	1.5T	2T	2T	
42.5	2T	3T	3T	
45.5	3T	5T	5	
49.5	5T	8T	8T	
53.5	8T	10T	10T	
57.5	10T	20T	20T	
62.5 Step to	0	0	0	
Rising times of steps	200	500	500	

3.5 Staircases and ramps, valid for GBR transcoder

YC_BC_R 2 Valid Ramp val__Rmp

Test pattern description

In one line ramps for Y,C_B,C_R are offered consecutively for the complete control range (0..700 mV or -350.. + 350 mV). The other two signals contain ramps which ensure that only valid values appear in the format GBR even after a matricing.

Application

Linearity measurements of Y,C_B,C_R in GBR formats at transcoders

The following values for G, B and R must result from the extreme values of the ramps:

Components	1st ramp		2nd ramp		3rd ramp	
Y	0	700	620	80	491	210
C_B	0	0	-350	350	118	-118
C_R	0	0	57	-57	-350	350
G	0	700	700	0	700	0
B	0	700	0	700	700	0
R	0	700	700	0	0	700

Technical data

	Time	Component		
		Y	C_B	C_R
Begin of sawtooth	10.5µs	0 mV	0 mV	0 mV
End of sawtooth	24.5µs	700 mV		
Constant part up to	25.5µs	700 mV		
Black level up to	27.5µs	0 mV	0 mV	0 mV
Step, constant part up to begin of sawtooth	28.5µs	620 mV	-350 mV	57 mV
End of sawtooth	42.5µs	80 mV	350 mV	-57 mV
Constant part up to	43.5µs	80 mV	350 mV	-57 mV
Step, black level up to	45.5µs	0 mV	0 mV	0 mV
Step, constant part up to begin of sawtooth	46.5µs	491 mV	118 mV	-350 mV
End of sawtooth	60.5µs	210 mV	-118 mV	350 mV
Constant part up to	61.5µs	210 mV	-118 mV	350 mV
Step to black		0 mV	0 mV	0 mV
Rising time of steps		200µs	500µs	500µs

YC_BC_R 2 Valid Staircase val__Stc

Test pattern description

The valid staircase corresponds to the valid ramp in all data except there are 5-step staircases instead of ramps.

Technical data EBU 625/50

Time/µs from	Y [mV]	C_B [mV]	C_R [mV]	G [mV]	B [mV]	R [mV]
10.5	0	0	0	0	0	0
13	140	0	0	140	140	140
15.5	280	0	0	280	280	280
18	420	0	0	420	420	420
20.5	560	0	0	560	560	560
23	700	0	0	700	700	700
25.5	0	0	0	0	0	0
28.5	620	-350	57	700	0	700
31	512	-210	34	560	140	560
33.5	404	-70	11	420	280	420
36	296	70	-11	280	420	280
38.5	188	210	-34	140	560	140
41	80	350	-57	0	700	0
43.5	0	0	0	0	0	0
46.5	491	118	-350	700	700	0
49	435	71	-210	560	560	140
51.5	379	24	-70	420	420	280
54	322	-24	70	280	280	420
56.5	266	-71	210	140	140	560
59	210	-118	350	0	0	700
61.5	0	0	0	0	0	0
Rising time	200 ns	500 ns	500 ns	*	*	*

* Due to the various rising times distortions occur in Y, C_B and C_R for GBR.

3.6 Staircases and ramps, general and shallow ramp

YC_BC_R 2 Sawtooth with positive rising (du/dt +) Saegez

Test pattern description

In all three channels there is a sawtooth with positive rising (du/dt +) in horizontal direction; this sawtooth covers the whole control range of the corresponding channel. The entire pattern consists of equal lines. Signals which do not comply with the specification result at outputs CVBS and GBR.

Application

Measuring the linearity of transmission lengths

Technical data

	EBU 625/50	
Component Y		
Begin of sawtooth rising 12 µs	0 mV	
End of sawtooth 62 µs for	700 mV	
Step to	0 mV	
Rising times	200 ns	
Components C_B,C_R		
Step to	-350 mV	
Begin of sawtooth rising 12 µs		
End of sawtooth 62 µs for	350 mV	
Step to	0 mV	
Rising times	500 ns	

YC_BC_R 2 Staircase 5 steps Lintr5

Test pattern description

In all three channels there is a 5-step staircase in horizontal direction; this 5-step staircase covers the whole control range of the corresponding channel. The total pattern consists of equal lines. Signals which do not comply with the specification result at outputs CVBS and GBR.

Application

Measuring the linearity of transmission length

Technical data

EBU 625/50 Time [µs]	Y [mV]	C_B [mV]	C_R [mV]	
from	0	0	0	
12	0	-350	-350	
20	140	-210	-210	
28	280	-70	-70	
36	420	70	70	
44	560	210	210	
52	700	350	350	
60	0	0	0	
Rising time in each case	200 ns	500 ns	500 ns	

YC_BC_R 2 Staircase 10 step Lintr10

Test pattern description

In all three channels there is a 10-step staircase in horizontal direction; this 10-step staircase covers the whole control range of the corresponding channel. The total pattern consists of equal lines. Signals which do not comply with the specification result at outputs CVBS and GBR.

Use

Measuring the linearity of transmission length

Technical data

EBU 625/50 Time [µs]	Y [mV]	C_B [mV]	C_R [mV]	
from	0	0	0	
12	0	-350	-350	
16	70	-280	-280	
20	140	-210	-210	
24	210	-140	-140	
28	280	-70	-70	
32	350	0	0	
36	420	70	70	
40	490	140	140	
44	560	210	210	
48	630	280	280	
52	700	350	350	
60	0	0	0	
Rising time in each case	200 ns	500 ns	500 ns	

YC_BC_R 2 Shallow Ramp sh_Rmp

Test pattern description

A flat sawtooth with a rising of 60 mV/40 µs = 70 mV/46.7 µs = 1.5 mV/µs is displayed over the whole screen. The setup is variable and adjustable via a rotary switch.

Application

Linearity examinations on analog/digital/analog converters, noise measurements on digital systems

Technical data

EBU 625/50 Time [µs]	Y [mV]	C_B [mV]	C_R [mV]	
	0	0	0	
12 Variable setup via rotary switch	-93 ... 860	-4777... + 476	-4777... + 476	
15 Step (100 ns) and begin of sawtooth rising with 1.5 mV/µs	Setup -35 mV	Setup -35 mV	Setup -35 mV	
62 End of sawtooth, step (100 ns)	Setup + 35 mV	Setup + 35 mV	Setup + 35 mV	
62.5 Step (200 ns)	0	0	0	

3.7 Further test patterns, noise coring

YC_BC_R Noise Coring Coring

Test pattern description

Five fly-formed amplitude modulated multiburst packets of varying frequency are added up to an average grey scale value

Application

Coring is used for noise suppression in various cameras and recorders. Coring suppresses small high-frequency noise parts, unfortunately, however, also fine image details. To render the application point of this noise suppression visible, the noise coring test pattern is used.

Technical data

	EBU 625/50		
Grey marking, 10 µs .. 62.5 µs in Y	350 mV		
Grey marking, 10 µs .. 62.5 µs in C_B, C_R	0 mV		
Rising time of steps in Y	200 ns		
Rising time of steps in C_B, C_R	500 ns		

5 packets with 70 mV_{PP} and a duration of 8 µs each

Packet No	Center	Frequency	
		Y	C_B, C_R
1	16 µs	1 MHz	0.5 MHz
2	26 µs	2 MHz	1 MHz
3	36 µs	3 MHz	1.5 MHz
4	46 µs	4 MHz	2 MHz
5	56 µs	5 MHz	2.5 MHz

Professional Video Generator VG 1100

TECHNICAL DATA

Option SECAM

GRUNDIG
electronic

3. Technical data:

Amplitude of color carrier:

$$U = 161\ mV \cdot \sqrt{\frac{1+(16F)^2}{1+(1.26F)^2}}$$

$$\text{with } F = \frac{f}{4286\ kHz} - \frac{4286\ kHz}{f}$$

Center frequency D_R:	4406.25 kHz ± 2 kHz
Amplitude at center frequency:	215 mV_{pp}
Center frequency D_B:	4250 kHz ± 2 kHz
Amplitude at center frequency:	167 mV_{pp}
Deviation range:	3900 kHz-4756 kHz ± 35 kHz
Field identification pulse:	
Position:	line 7-15 and 320-328
Frequency D_R:	4756 kHz ± 35 kHz
Rise time:	15 µs ± 5 µs
Frequency D_B:	3900 kHz ± 35 kHz
Rise time:	20 µs ± 10 µs
Color carrier blanking:	from 1.5 µs before up to 5.5 µs ± 200 ns after the leading edge of sync and during blanking interval (with the exception of the lines 7-15 and 320-328 with field identification)

As supplement to the Technical Data of PAL B,G of the basic unit a list of the color carrier frequencies of SECAM is given in the following.
Only color test patterns or part of color test patterns are taken into account, for the other test patterns the center frequencies apply.
The numbering corresponds to the technical data of the basic unit.

6.1.1 FuBK-test pattern

Luminance signal: see Technical Data PAL B,G

6.1.1.2 Color bars

Color carrier frequency

Color	Frequency D_R [kHz]	Frequency D_B [kHz]
white	4406	4250
yellow	4361	4020
cyan	4686	4328
green	4641	4098
magenta	4172	4402
red	4126	4172
blue	4452	4480

Tolerance ±35 kHz

	Frequency D_R [kHz]	Frequency D_B [kHz]
6.1.1.6 Color carrier burst (G-Y) = 0	4236	3959
6.1.1.8 BA_V-sawtooth	increasing from 4292 to 4406	4250
6.1.1.8 BA_U-sawtooth	4406	decreasing from 4382 to 4250
6.1.1.10 Achromatic + BA_V	4634	4250
6.1.1.11 Achromatic ± BA_U	4406	4514

Tolerance ± 35 kHz

6.1.2 VTR test pattern:

See color bar 6.1.1.2

6.3.1 Color bars 100/0/75/0:

Luminance signal see Technical Data PAL B,G

Color	Frequency D_R [kHz]	Frequency D_B [kHz]
white	4406	4250
yellow	4361	4020
cyan	4686	4328
green	4641	4098
magenta	4172	4402
red	4126	4172
blue	4452	4480

Tolerance ± 35 kHz

6.3.2 Color bars 75/0/75/0:

As in 6.3.1

6.3.3 Color bars 100/0/100/0:

Color	Frequency D_R [kHz]	Frequency D_B [kHz]
white	4406	4250
yellow	4346	3943
cyan	4756	4354
green	4719	4047
magenta	4094	4453
red	4033	4147
blue	4467	4557

6.3.4 Color bars 100/0/100/25:
As in 6.3.1

6.10 Insertion test signals

6.10.1 ITS 17:

	Frequency D_R [kHz]	Frequency D_B [kHz]
20-T-pulse peak	4143	4426

6.10.5 ITS 330:

	Frequency D_R [kHz]	Frequency D_B [kHz]
Superimposition 280 mV	4301	4320
Superimposition 140 mV	4354	4285

6.10.6 ITS 331:

	Frequency D_R [kHz]	Frequency D_B [kHz]
Color packet G1	4143	4426
Color packet E	4248	4355

6.10.7 ITS 331a:

	Frequency D_R [kHz]	Frequency D_B [kHz]
1st bar	4345	4285
2nd bar	4248	4355
3rd bar	4143	4426

6.15 Color superimposition for grey scale and sawtooth:
See 6.10.5

Supplements to software version 3.xx

6.1.4 Philips test pattern

	Frequency D_R [kHz]	Frequency D_B [kHz]
6.1.4.3 Achromatic range $\pm BA_V$	4263	4250
6.1.4.3 Achromatic range $\pm BA_U$	4406	4416

6.1.4.3 Color axis

	Frequency D_R [kHz]	Frequency D_B [kHz]
$+V_{BV}$	4263	4250
$-V_{BV}$	4549	4250
$+V_{BU}$	4406	4416
$-V_{BU}$	4549	4084
326 °	4486	4387
146 °	4326	4113

6.1.4.13 Yellow-red-yellow

	Frequency D_R [kHz]	Frequency D_B [kHz]
yellow	4126	4172
red	4360	4020

6.5.4 2T/20T/15 kHz

	Frequency D_R [kHz]	Frequency D_B [kHz]
	4143	4426

6.5.4.5 Demodulator test pattern

	Frequency D_R [kHz]	Frequency D_B [kHz]
V_{BU} 0 °	4406	4536
V_{BU} 180 °	4406	3964
V_{BV} 90 °	4055	4250
V_{BV} 270 °	4756	4250
V_{BV} 146 °	4236	3959
V_{BV} 326 °	4576	4541

Professional Video Generator VG 1100

TECHNICAL DATA

TXT/VPS Option

GRUNDIG
electronic

3. Technical data:

3.1 Technical data TXT

The following data are only valid for standards PAL B/G and SECAM.

Modulation	NRZ
Data rate	6.9375 MBit/s ± 10 ppm locked to H
Time reference of the penultimate "1"-pulse (pulse center) to the negative sync-edge	12 µs ± 0.1 µs
Level with standard video signal	"0": 0 mV ± 5 mV "1": 462 mV ± 20 mV (66% white)
Pulse shape	$\sin^2$-similar
Coding	according to EBU-report 957
Capacity	max. 1024 lines = 42 sides

The TXT pages are transmitted during max. 6 lines/field within the range of line 6 to 22 or 319 to 335, which can be chosen freely via menu "Configurate Patterns". In addition to that frame display is possible via key TXT.

Pages included in Eprom 9-40214-935.01:

P. 100: Table of contents

P. 110: English character set

P. 111: German character set

P. 112: Scandinavian character set

P. 113: Italian character set

P. 114: French character set

P. 115: Spanish character set

Pages 110 to 115 are similar to the character set test page transmitted by some broadcasting stations and contain all text and graphic characters specific for each country.

P. 199: Clock-Cracker"-text page with critical character combinations for checking the correct clock synchronization, especially with older videotext decoders.

P. 200: Automatic fade-in of subtitles in the actual text pattern.

P. 303: "Program preview" with all additional information for the "VPV"-programming of video recorders.

P. 323: Page 303 with English text

P. 555: Logo "videotext"

3.2 Technical data VPS

Modulation	biphase
Data rate	2.5 MBit/s ± 10 ppm locked to H
Time reference of the first "1"-pulse (rising edge) to the negative sync-edge	12.5 µs ± 1.5 µs
Level with standard video signal	"0": 0 mV ± 5 mV "1": 500 mV ± 20 mV
Pulse shape	$\sin^2$-similar
Coding	according to ARD/ZDF/ZVEI-guideline "video- programming-system" as of 4.12.84
Transmission:	By activating the "VPS" key the VPS-information can either be broadcast in line 16, in the frame or in line 16 + frame.
Contents of the VPS line	Four free labels and the three special labels "Interruption code", "Status code" and "Blank code" can be configured and stored via menu "Config Patterns/Services".

The following parameters can be changed via a screen menu:

- Time
- Date
- Audio status
- Program source
- Country identification
- Address range
- U-certificate label.

The "Label No." key determines which pre-programmed label is broadcast. This makes quick switch-over possible.

Professional Video Generator VG 1100

Technical Data

Option IEEE-488

GRUNDIG electronic

3. Technical data

The option corresponds to the IEEE Standard 488-1978 (GPIB) with respect to electronics and mechanics.

4. Programming example

The following examples have been written on IBM-PC in the programming language GW-Basic. The PC insertion card GPIB-PC of National instruments with the corresponding software served as IEEE-controller. Transfer to another controller should, however, be no problem.

```
10 '   Programming examples for VG 1100 via IEEE 488
40 '
100 '*****  Configuration of IEEE controller card "GPIB-PC"
110 '
120       CLEAR   ,60000!
130       IBINIT1 = 60000!
140       IBINIT2 = IBINIT1 + 3
150       BLOAD "bib.m",IBINIT1
160       CALL IBINIT1 (IBFIND, IBTRG, IBCLR, IBPCT, IBSIC, IBLOC, IBPPC, IBBNA, IBONL, IBRSC, IBSRE,
          IBRSV, IBPAD, IBSAD, IBIST, IBDMA, IBEOS, IBTMO, IBEOT, IBRDF, IBWRTF)
170       CALL IBINIT2 (IBGTS, IBCAC, IBWAIT, IBPOKE, IBWRT, IBWRTA, IBCMD, IBCMDA,IBRD, IBRDA, IBSTOP,
          IBRPP, IBRSP, IBDIAG, IBXTRC, IBRDI, IBWRTI, IBRDIA, IBWRTIA, IBSTA%, IBERR%, IBCNT%)
180 'Unit 1 VG1100 (Address is determined in the program IBCONF of the)
190 'Unit 2        (software for GPIB-PC)
200 '     Initialization of GPIB-CARD
210 '     Two VG 1100 are controlled, receiving the symbolic names
220 '     VG1100 und UNIT2
230 BDNAME$="GPIB0"
240 CALL IBFIND (BDNAME$,GPIB0%)          'Symbolic address  of controller
250 CALL IBSIC (GPIB0%)                   'send IFC
260 '
270 BDNAME$="VG1100"                      'Symbolic address  of unit1
280 CALL IBFIND (BDNAME$,VG1100%)
290 '
300 BDNAME$="UNIT2"                       'Symbolic address  of unit 2
310 CALL IBFIND (BDNAME$,UNIT2%)
320 '
1000 PRINT"            Different unit settings"
1010 PRINT"            Output test pattern chroma dots"
1020 '
1030 SET$="pat dots" + CHR$(10)       'The setting sequence is terminated by LF
1040 CALL IBWRT (VG1100%,SET$)
1050 '
1100 PRINT"            Output test pattern VTR"
1110 PRINT""
1120 '
1130 SET$="PAT VTR     "                'in capital letters
1140 CALL IBWRT (VG1100%,SET$)
1150 '
1200 PRINT"            Standard switchover NTSC 4,43"
1210 PRINT""
1220 SET$="stand ntsc 4.43"
1230 CALL IBWRT (VG1100%,SET$)
1240 '
1300 PRINT"            Circle on"
1310 PRINT""
1320 SET$="cirON "                      'Letters mixed
1340 CALL IBWRT (VG1100%,SET$)
1350 '
1400 '      Output test pattern green on unit 2
1410 '
1420 SET$="Pat Green  "                  'Letters mixed
1430 CALL IBWRT (SET2%,SET$)
1450 '
1500 PRINT "      Standard switchover Pal B/G"
1510 PRINT""
1520 '
1530 SET$="stand pal bg   "
1540 CALL IBWRT (VG1100%,SET$)
1550 '
1560 PRINT"            Circle off"
1570 PRINT""
1580 SET$="cir off"
```

```
1590 CALL IBWRT (VG1100%,SET$)
1600 '
1650 GOSUB 2000                              'Change amplitudes
1710 '
1720 CALL IBLOC (VG1100%)                    'switch to local control
1730 CALL IBCLR(VG1100%)    'CLEAR corresponds to switching off and on again the
1735 '                       VG 1100
1740 PRINT"      The operator can input optional setting sequences"
1750 PRINT"      for test purposes. End program with E"
1760 PRINT""
1770 '
1780 INPUT "Input setting sequence of unit 1 :",SET$
1790 IF SET$ ="E" THEN END
1800 PRINT "Transmitted setting sequence of unit 1=:",SET$
1810 CALL IBWRT(VG1100%,SET$)
1820 '
1830 FOR I = 1 TO 1000  'Waiting loop for error output
1840 NEXT I             'of VG 1100. (approx. 1s)
1850 '
1860 CALL IBRSP(VG1100%,SPR%)
1870 IF SPR% >= &H40 THEN GOTO 1920
1880 GOTO 1780
1890 '
1900 PRINT   "A serial poll is carried out to get the error number"
1910 '  Display of error type
1920 PRINT USING "Status Byte \     \";HEX$(SPR%)+"H"
1930 PRINT "Error number = ";SPR% AND &H1F
1940 GOTO 1780
1950 '
1960 '
2000 PRINT"            Change amplitudes (CVBS) "
2010 '
2020 FOR WERT = 0 TO 200  STEP 10         'up to 1000mV in 10 steps
2030 TBILD$="ampl cvbs"+STR$(WERT)
2040 CALL IBWRT (VG1100%,TBILD$)
2050 FOR I= 1 TO 300                       'waiting loop
2060 NEXT I
2070 NEXT WERT
2080 TBILD$="amplcal"                      'calibrate
2090 CALL IBWRT (VG1100%,TBILD$)
2100 RETURN
2110 SET$="stand ntsc 4.43"
2120 CALL IBWRT (VG1100%,SET$)
2130 '
```

Professional Video Generator VG 1100

TECHNICAL DATA

Option Test Pattern 16:9

GRUNDIG
electronic

3. Technical data

3.1 FuBK test pattern (16:9)

3.1.1 Surround

Grid with 25 vertical and 15 horizontal lines, interrupted at the centre by a 12 x 10 grid area. Surround has grey background.

	PAL B,G,I PAL N SECAM	NTSC-M PAL-M
Horizontal lines:		
Ampl. (100 %)	700 mV ± 1 %	714,3 mV ±1 %
Visual width	1 line / field	1 line / field
Vertical spacing	20 H	17 H
Vertical lines:		
Ampl. (100 %)	700 mV ± 1 %	714,3 mV ± 1 %
HAD	200 ns ±10 ns	250 ns ±25 ns
Period of oscillation	2 µs ±50 ns	2 µs ±50 ns
Grey background of surround:		
Ampl. (25 %)	175 mV ± 1 %	214,3 mV ± 1 %
Convergence cross:		
At picture centre, ±2 grid fields high. Continuous horizontal crosshatch line at picture center		At picture centre, ±2 grid fields high. Unbroken horizontal grid line at picture centre
Ampl.	700 mV ± 1 %	714,3 mV ± 1 %
HAD	200 ns ± 10 ns	250 ns ± 25 ns
Vertical picture centre	Line 166	Line 142
Horizontal picture centre (relative to neg. sync. edge)	36.5 µs	35,7 µs

3.1.2 Colour bar

Decreasing brightness from white to black. Height of colour bar: 3 grid fields

	PAL B,G,I,N Luminance		Chrominance Ampl.	Angle	NTSC-M Luminance		PAL-M Chrominance Ampl.	Angle
	(mV)	(%)	(mVpp)	(Degrees)	(mV)	(%)	(mVss)	(Degrees)
White	525	(75)	-	-	549,1	75	-	-
Yellow	465	66.4	470	167.1	492,3	66,4	444	167,1
Cyan	368	52.6	664	283.5	401,1	52,6	626,3	283,5
Green	308	44	620	240.7	344,3	44	585,4	240,7
Magenta	216	30.9	620	60.7	257,8	30,9	585,4	60,7
Red	157	22.4	664	103.5	201,6	22,4	626,3	103,5
Blue	60	8.55	470	347.1	110,1	8,55	444	347,1
Black	0		-	-	53,6	0	-	-
Tolerance	±1%		±3%	±3°	±1%		±3%	±3%

3.1.3 Grey scale

5 steps beginning with black (0, 25, 50, 75, 100 %)
A 2T pulse is contained in the centre of the line, in the upper third in U, in the middle third in Y and in the lower third in V.

Height of grey scale is 2 crosshatch fields

	PAL B,G,I PAL N SECAM	NTSC-M PAL-M
Ampl. of white bar	700 mV ±1 %	714,3 mV ±1 %
Variation between steps	< ±1 mV	< ±1 mV
Rise time between steps	200 ns ±20 ns	250 ns ±25 ns
Height of grey scale with U 2T	2/3 grid fields	2/3 grid fields
Height of grey scale with Y 2T	2/3 grid fields	2/3 grid fields
Height of grey scale with V 2T	2/3 grid fields	2/3 grid fields

3.1.4 Black line with 2T and station identifier

Height: 1 crosshatch field

3.1.5 Station identifier

Text superimposition is possible in the black area.

	PAL B,G,I PAL N SECAM	NTSC-M PAL-M
Text rise/fall time	140 ns	140 ns

3.1.6 White bar with black pulse triangle, shallow ramp and colour carrier packet

Height: 1 crosshatch field

	PAL B,G,I PAL N SECAM	NTSC-M PAL-M
Max. duration of pulse	1.4 µs	0,7 µs
Rise/fall time	140/200 ns	140/250 ns
Ampl. of white bar	700 mV ± 1 %	714,3 mV ± 1 %
Colour carrier packet	4.43 MHz 3.582 MHz	3,582 MHz
Colour carrier packet phase	±145,9° ±3°	±145,9° ±3°
Ampl. of frequency group	Upp = 700 mV ± 2 %	714,3 mV ± 2 %
Ampl. of luminance	350 mV ± 1 %	357,2 mV ± 1 %
Height of ramps	1/5 grid field	1/5 grid field
Amplitude of ramp 1	0-140 mV	0-143 mV
Amplitude of ramp 2	140-280 mV	143-286 mV
Amplitude of ramp 3	280-420 mV	286-429 mV
Amplitude of ramp 4	420-560 mV	429-572 mV
Amplitude of ramp 5	560-700 mV	572-715 mV

3.1.7 Multiburst

Height: 1 crosshatch field

	PAL B,G,I PAL N SECAM	NTSC-M PAL-M
Frequency packets	1, 2, 3, 4, 4.5, 5, 5.5 MHz	1, 2, 3, 4, 4.5, 5, 5.5 MHz
Ampl. of frequency group	Vpp = 700 mV ± 2 %	Vpp = 714,3 mV ± 2 %
Ampl. of luminance	350 mV ± 1 %	357,2 mV ± 1 %
Wave form frequency group	Sinusoidal packets with 50% grey between packets	Sinusoidal packets with 50% grey between packets
White bar in front of freq. grp.	700 mV ± 1 %	

3.1.8 Saw tooth with $\pm V_{BV}$ modulated colour carrier

Height: 1 crosshatch field

	PAL B,G,I PAL N SECAM	PAL-M NTSC-M
Luminance signal	Saw tooth beginning on the left with 262.50mV (37.5%), 2 grid fields constant, then within 6 crosshatch fields linear fall to zero. A colour carrier is overlaid having the same size as the luminance signal at each position of the sawtooth.	Saw tooth beginning on the left with 268 mV (37,5 IRE), 2 grid fields constant, then within 6 crosshatch fields linear fall to 53,6 mV. A colour carrier is overlaid having the same size as the luminance signal at each position of the sawtooth.
Colour phase angle	90°/270° ±2° alternating	90° ±2°

3.1.9 Saw tooth with $+V_{BU}$ modulated colour carrier

Height: 1 crosshatch field

	PAL B,G,I PAL N SECAM	PAL-M NTSC-M
Luminance signal	see $\pm V_{BV}$ modulated components	see $\pm V_{BV}$ modulated components
Colour phase angle	0° ±2°	

3.1.10 Achromatic field with $+V_{BV}$ modulated colour carrier

Height: 2 grid fields
Width: 2 grid fields

	PAL B,G,I PAL N SECAM	PAL-M NTSC-M
Luminance signal	262.5 mV ± 1 %	53,6 mV (7,5 IRE) ± 1 %
Colour phase angle	90° ± 2°	123° ± 2° (I-axis)
Chroma amplitude	Vpp = 525mV ± 3 %	Vpp = 286 mV ± 3 % (40 IRE)

3.1.11 Achromatic field with $\pm V_{BU}$ modulated colour carrier

Height: 2 grid fields
Width: 2 grid fields

	PAL B,G,I PAL N SECAM	PAL-M NTSC-M
Luminance signal	262.5 mV ± 1 %	53,6 mV (7,5 IRE) ± 1 %
Colour phase angle	0° / 180° ±2° alternating	33,2° ±2° (Q-axis)
Chroma amplitude	Vpp = 525mV ± 3 %	Vpp = 286 mV ± 3 % (40 IRE)

3.1.12 Circle

	PAL B,G,I PAL N SECAM	PAL-M NTSC-M
Ampl. of circle signal	700 mV ± 1 %	714,3 mV ± 1 %
Circle diameter	267 lines = 13.4 crosshatch fields	229 lines = 13.4 crosshatch fields
Position	symmetric to midpoint	symmetric to midpoint
Width of circle with line at image centre	approx. 250 ns	approx. 250 ns
Amplitude fall at image centre	< -5 %	< -5 %

3.1.13 4:3 Limitations

	PAL B,G,I PAL N SECAM	Grid lines interrupted at the following positions: PAL-M NTSC-M
Height	approx. 2.5 crosshatch fields	2 crosshatch fields
Position in front	17us	15,65 us
Position behind	56us	55,7 us
Wave form SIN² HAD	200ns ±10ns	250 ns ±25 ns

3.2 Grid 16:9

3.2.1 Horizontal lines:

	PAL B,G,I PAL N SECAM	PAL-M NTSC-M
Ampl. (100 %)	700 mV ± 1 %	714,3 mV ± 1 %
Visual width	1 line / field	1 line / field
Vertical spacing	20 H	17 H

3.2.2 Vertical lines:

	PAL B,G,I PAL N SECAM	PAL-M NTSC-M
Ampl. (100 %)	700 mV ± 1 %	714,3 mV ± 1 %
HAD	200ns ±10ns	250 ns ±25 ns
Horizontal spacing	2µs ±50ns	2 µs ±50 ns

3.2.3 Grey background in surround:

	PAL B,G,I PAL N SECAM	PAL-M NTSC-M
Ampl. (25 %)	175 mV ± 1 %	214,3 mV ± 1 %

3.2.4 4:3 Limitations

	PAL B,G,I PAL N SECAM	Grid lines interrupted at the following positions: PAL-M NTSC-M
Height	approx. 2.5 grid fields	2 grid fields
Position in front	17us	15,65 us
Position behind	56us	55,7 us
Wave form SIN^2 HAD	200ns ± 10ns	250 ns ± 25 ns

Professional Video Generator VG 1100

INSTALLATION AND STARTUP

GRUNDIG
electronic

Installation and Startup

1. Installation

The VG 1100 video generator can either be operated as a stand-alone unit or can be built into a 19" rack. The ventilation slots must not be covered and the permissible temperature range of +5°C to +40°C must be adhered to.

The 19" adapter option (Order No. G.UE 36-02) is necessary if you wish to build into the 19" rack. The following conversion tasks must be carried out:

- Remove the 4 screws on the sides of the housing half-shells.
- Remove the screws on the upper housing half-shell (rear panel).
- Remove the upper housing half-shell.
- Unscrew the feet on the housing floor.
- Remove the retaining rings of the unit handle and the handle itself.
- Lay the upper half-shell on the VG 1100 once more and screw onto rear panel.
- Screw the sides (19" adapter) and the housing half-shells tightly with M3×8 lense screws.
- Screw the universal handles and cover plates onto the sides with M5 x 20 lense screws and an A 5.3 fan washer.
- See installation diagram for the 19" adapter option.

2. Power supply/Voltage selection

The VG 1100 video generator can be operated on 220 (±10 %), 240 or 110 V AC voltage supplies. The factory setting is 220 V. Before connecting the video generator to the mains, check to see whether the on-site mains voltage concurs with the voltage selected by the mains voltage selector switch. If not, change the mains voltage selector as follows:

1) With the mains cable unplugged:
   Lift the lid of the fuse holder (16) using a small screwdriver and pull out the fuse holder.
2) Replace the fuse in accordance with the new operational voltage (See inscription).
3) The fuse holder must then be replaced in such a way that the arrow is pointing to the new voltage.

When changing a fuse, only use G fuse link 5 x 20 to DIN 41662!

With 220/240 V:	0.63 A delay-action
With 110 V:	1.25 A delay-action

3. Converting/Modifying

The various modules have soldering straps and circuits which are reserved for modifications to the unit.

MCB 50 operator part

BR 1...BR 4	No function assigned
BR 5...BR 9	If a keyboard other than the one specified in the Technical Data is used, it can be opened and adapted to the VG 1100 by rewiring these straps.
BR 10	LED test: all LEDs are lit when the strap is closed.
D 49...D51	No function assigned

MCS 50 mains part

BR 1	The overvoltage monitoring switch is disabled when the strap is open.

MCM 50 YUV memory

BR 201	May not be opened
BR 301	May not be closed
BR 302, BR 303, BR 304	The delay time of the 13.5 MHz clock can be changed using straps BR 302, BR 303 and BR 304. Only one of the straps may be closed at any one time.

MCP 51 µP module

BR 1	No function assigned
BR 5	BR 5 must be resoldered if an LCD with 5 V contrast control is used.
BR 6	No function assigned
BR 7	No function assigned
BR 8	No function assigned
BR 9	No function assigned
BR 10	Must be resoldered from Software 3.xx
TEST 1...4	No function assigned
STEST 1...4	No function assigned

MCO 50 multiburst module

BR 3	Closing the strap raises the referential voltage for the IC 21 DA converter by 5 %.
BR 4	Closing the strap raises the referential voltage for the IC 21 DA converter by 10%.
BR 5	Closing the strap raises the referential voltage for the IC 22 DA converter by 10%.
BR 6	As with BR 5

BR 7 Closing the strap shortens the STOP pulse.

BR 8 The number of maximum possible multiburst clock pulses is restricted by resoldering the strap.

BR 9 Resoldering the strap causes a different area of RAM to be used.

BR 30 When this strap is closed, the charging current for C 54 is decreased by ca. 3%.

BR 31 When this strap is closed, the charging current for C 54 is increased by ca. 3%.

BR 40 Closing this strap causes the positive setpoint value for comparator IC 29 to be increased by ca. 3 %.

BR 41 Closing this strap causes the positive setpoint value for comparator IC 29 to be decreased by ca. 3 %.

MCV 50 video module

BR 1 Resoldering this jumper causes the clock signal for the R-Y DA converter and B-Y DA converter to be delayed by 37 ns.

BR 600 Resoldering this jumper causes the clock signal for the Y DA converter to be delayed by 37 ns.

MCC 50 PAL color module

BR 300 Must be closed when operational (an open strap causes the temperature control XTAL to shut down).

MCJ 51 Pulse output-stage module

BR 200 Resoldering this strap causes the A (H) pulse to be switched to the H output.

BR 201 Resoldering this strap causes the H/2 pulse to be switched to the P output.

BR 202 Resoldering this strap causes the V 8 pulse to be switched to the reserve 1 output instead of the V 25 pulse.

BR 203 When this strap is closed (BR 202 must be open) the frame pulse is present at the reserve 1 output.

Jumper One of these pulses can be switched to reserve output 2 by means of a jumper between point IMP and measuring points H, A, S, K, P, V, A (H), H/2, V 25, V 8 or H/4. The outputs reserve 1 and 2 are only operational after the operation amplifiers IC 370 and IC 380 have been fitted (LM 6361 National Semiconductors).

MCC 51 SECAM color module

LB 1 If this strap is opened, the signal path of the bandwidth-restricted SECAM signal is interrupted. This strap must be closed if the VG 1100 is to be operated without the PAL color module.

MCD 50 teletext / VPS module

BR 1 Must be resoldered for teletext.

BR 2 This strap must be closed if IC 6 is replaced by a 512 kB EPROM (EPROM 27256).

BR 3 This strap can be opened for test purposes and address input A13 of IC 6 connected to a different output of the IC 4 counter.

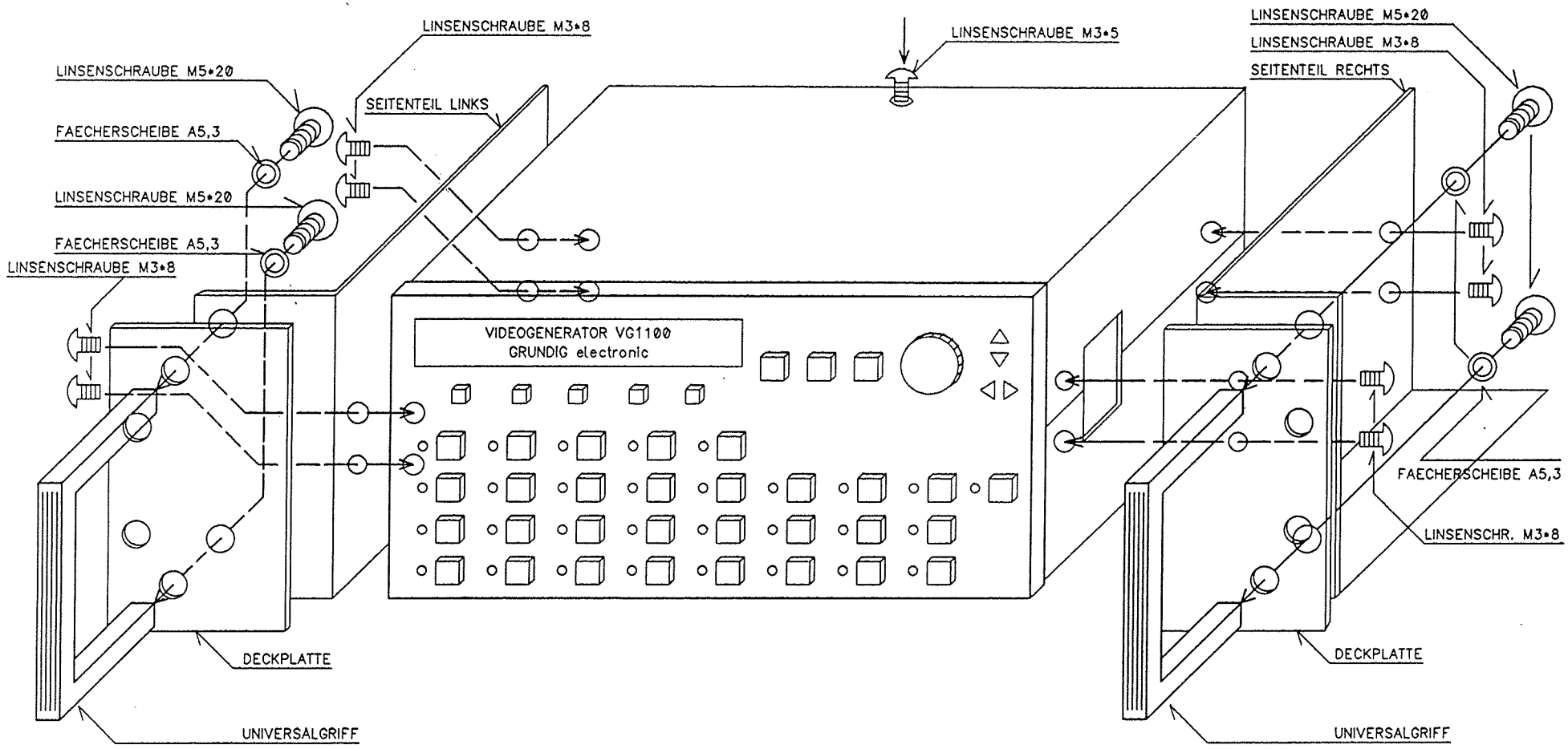

MONTAGEZEICHNUNG FUER OPTION:
19"-ADAPTER G.UE 36-02

GRUNDIG electronic

Professional Video Generator VG 1100

MOUNTING INSTRUCTIONS

SW Exchange

GRUNDIG
electronic

1. Software exchange for VG 1100

Note: The software exchange may only be carried out by qualified personnel.
Please study these instructions thoroughly before starting work.
The ICs which are to be exchanged are sensitive to static discharge. They should not be removed from the protective packing before installation. Please observe the protective precautions for the handling of MOS components.

The activities to be carried out and the required parts depend on the desired software modification and the revision number of the pcb MCP 51 in the unit.
Please consult table 1.

You may request the installed software version by pressing the key TEXT/TIME. The following menu will appear on the LCD:

```
text      clock      language
```

Press "language" and then the current language. The version no. will be displayed for some seconds. From software version 5.10 onwards, the software edition is also displayed when switching on.

Tools and measuring instruments required for installation

A 2 mm Hexagonal wrench, Philips screwdriver, tweezers, and, if necessary, a soldering bit, insulated wire approx. 100 mm in length

Installation:

- Disconnect unit from mains
- Remove fixing screws of the upper half of the casing (2 screws each on left and right, one at the back in the middle), remove cover
- Remove both holding rails
- If the unit is equipped with an IEEE-488 interface, remove connection between IEEE-card and pcb MCP 51
- Unplug the two pcbs 'MCP 50' and 'MCP 51' together (refer to drawing) and place them on a non-conductive surface
  (Danger of short-circuiting the battery on MCP 50)
- Remove the shielding plate from MCP 51
- Depending on the pcb version of the board MCP 51 and the desired software modification, the measures listed in table 1 have to be carried out

a): exchange of a GAL and the Eproms:
IC 3: 40214-400.06
IC 4: 40214-416.xx
IC 5: 40214-426.xx
IC 32: 40214-436.xx
IC 33: 40214-446.xx

b): insert battery backuped RAM part no. 8305-148-226 in socket IC7

c): remove wire connecting IC5/pin27 with ground, connect IC5/pin27 with IC1/pin45 via an insulated wire

d): resolder the soldering strap LBR 10 (rear of MCP 51) as shown in drawing .

Table 1:

Software exchange	ev. no. MCP 51	work and parts
2.xx -> 6.xx	40214-740.00 **(02)**	a), b), c)
2.xx -> 6.xx	40214-740.00 **(03)**	a), b), d)
3.xx - 5.xx -> 6.xx	all	a)
6.xx -> 6.yy	all	a)

- Release clamping of the Eprom base by pushing the orange lever upwards, remove Eproms.
- Press lever downwards, insert the new Eproms carefully the right way up; all IC legs must click cleanly into the base.
- Check again to ensure perfect fit of Eproms
- Screw the shielding plate onto the MCP 51 again
- Insert MCP and MCP51 into the baseplate together; if necessary, reconnect plug of IEEE card
- Ensure that all flat cables fit correctly
- Fix the holding rails. Make sure that no cables are jammed between casing and holding rails
- Connect unit to mains and switch on
- Activate the reset key on the operating panel during power-on; "RESET" must appear on the LCD and the FuBK test pattern must be built up after a few seconds.

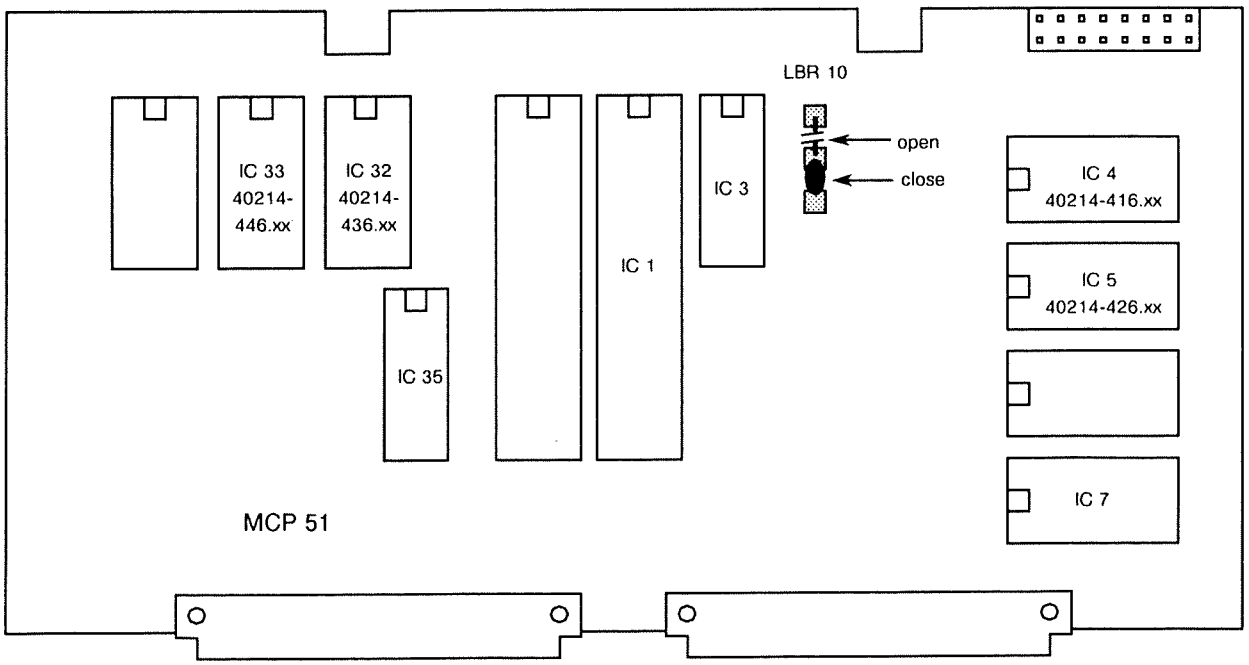

GRUNDIG electronic

Professional Video Generator VG 1100

MOUNTING INSTRUCTIONS

Components Option

GRUNDIG
electronic

1. Mounting

1.1 Preparation / Installation

Attention! The device contains MOS integrated circuits; the relevant instructions for work are to be observed especially concerning earthing measures for all work on open devices, individual PCBs and ICs

Tools required for mounting:
A 2 mm hexagon-socket spanner, a Philips screwdriver (type Pozidriv, sizes 1 and 2), an electronic soldering station, a trimming tool, a video level measuring instrument, an oscilloscope (>100 MHz) with a 75-Ω load; if interface IEEE 488 is installed: a 7 mm open-ended spanner

Preparatory work

- Determination of the software version (is required later)

Press the key **TEXT/TIME** on the keypad **CONFIGURATE**. The display shows the following menu:

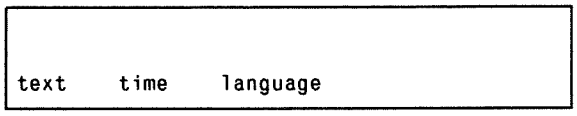

Press the softkey "language" and subsequently your current choice of language. The display indicates the software version number for a few seconds. Please note this.

- Disconnect unit from mains
- Unscrew the fixing screws of the upper and lower half of the housing (10 altogether, 2 each on the right, 2 each on the left and 1 at the back in the middle) and remove cover
- Remove both PCB rails
- Disassemble rear panel cover. For this,
  - remove the 4 feet (Pozidriv size 2)
  - remove the outer casing of the IEEE-488 interface and loosen the two fixing screws of the IEEE-488 plug-in connector and
  - unscrew the rear panel fixing screws (1 each in the middle at the top and at the bottom) ,
  - remove rear panel cover.
- Loosen fixing screws for signal generator (MCT 50), blanking plate for component card and blanking plate for GBR outputs
- Remove blanking plates as they are no longer required

Option synchronous pulse on B and R

For various uses, it is important to have at outputs B and R likewise a synchronous pulse. This can be attained by fitting the resistors R884 and R894 with 499 Ω on the components card (planned are Mini Melf 0204, 0.1% TK25 part no. 8706-500-459). With PCB index 03 onwards, just close straps BR 880 and BR 890.

Installing option component outputs

- Fix socket plate for GBR outputs to the provided place in such a way that the lead marked with green is attached to the uppermost socket
- Lift device out of the lower casing and guide wires through the PCBs MCI 51 and MCV 50 to the slot of the components option as shown in enclosed diagram
- Place device back into casing
- Remove shielding cable from the cut-out supports of the PCBs
- Pull out multiburst card MCO 50 carefully straight upwards from the female multipoint connector baseplate and place on the right half of device paying attention to the lead to the video card
- Pull out signal generator card MCT 50 carefully straight upwards from the female multipoint connector baseplate and place on the multiburst card paying attention to the lead to the color card
- Place components option MC V52 carefully straight downwards into the female multipoint connector baseplate, and connect the wires of the GBR socket plate at the rear end of the PCB between shielding plate and PCB to the plug-in connectors S826 to S828. The plug-in sockets are marked with G, B and R. Insert the corresponding wire.
- Attach a 60-pole female multipoint connector (or three 14-pole multipoint connectors) onto the three plugs at the front end of the components option, carefully bend the wire slightly between the sockets which are very close together
- Reinsert signal generator carefully
- Place multiburst card MCO 50 in either free plug ST1 or ST2 (both are equal), plug in supplied connecting lead
- Put multiburst card MCO 50 carefully back in its place
- Plug other end of the connecting lead on the component card into plug S825, also marked with MB.
- Screw the socket angle of the PCBs signal generator and components option tightly onto the rear panel (2 screws each)
- Put rear panel cover back into place and screw on device feet tightly
- Screw on bottom half of the housing again tightly

Further work

- Carefully pull memory card MCM 50 vertically upwards from the female multipoint connector base plate
- Remove tin from IC 110 eyelets
- Fit and solder IC 110 (SRAM 64 kx4, 35 ns, Grundig Part No. 8305-004-364). Please observe the characteristics of pin 1
- Plug memory card MCM 50 back into female mutipoint connector base plate
- Carefully pull mains unit vertically upwards from the female multipoint connector base plate
- From the plug under the shielding press down the high-load resistor R18, on the right diagonally in front of a coil, with a medium sized screwdriver, so that it lies on the PCB
- Reinsert mains unit

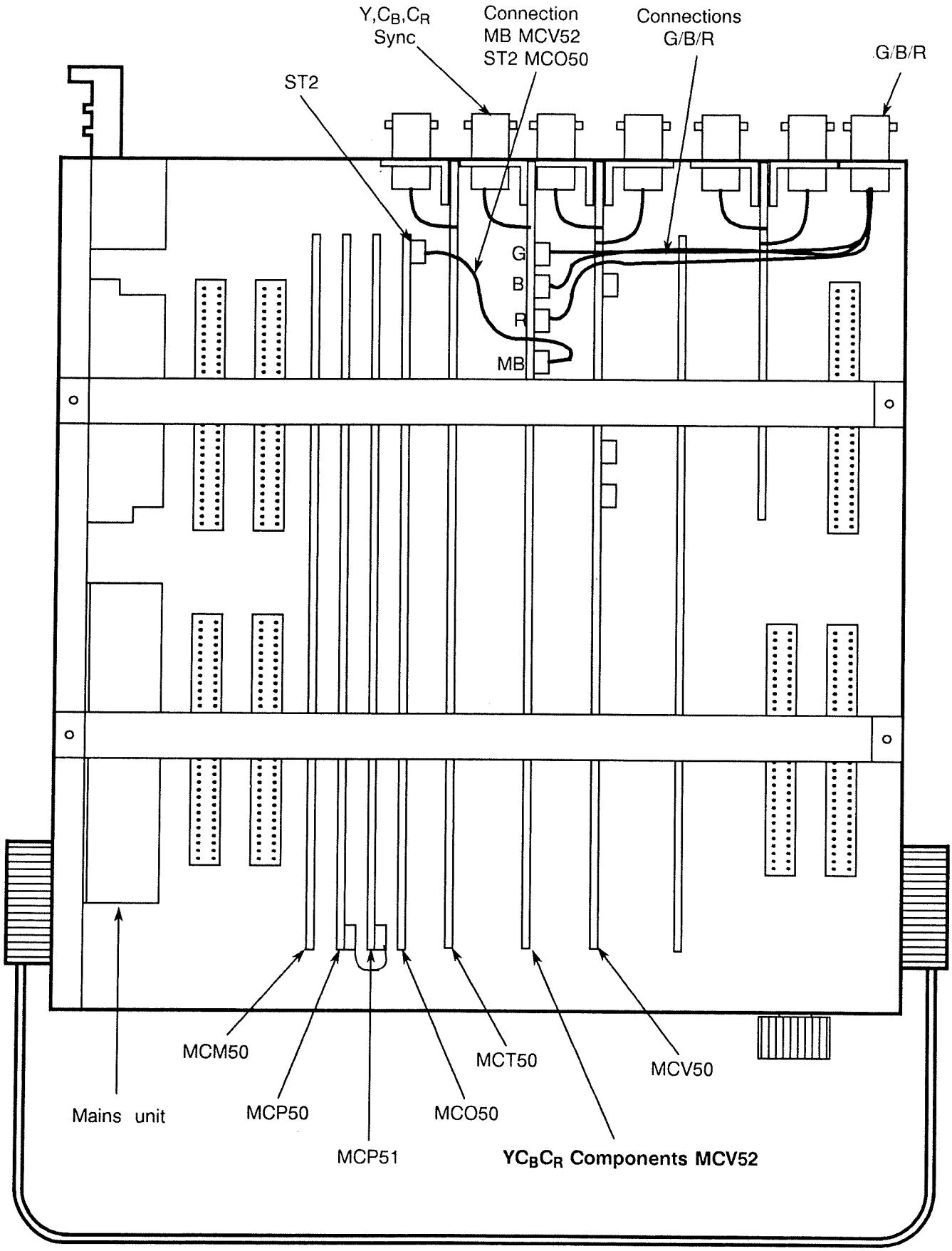

Installation sketch YC_BC_R Components

Exchange software

- Carefully pull sequence control system MCP 50 and CPU card MCP 51 together out of the female multipoint connector baseplate, if necessary, pull plug out of IEEE 488 beforehand
- Loosen the fixing of shielding of CPU plate MCP 51 on the one side and turn plate to side. Attention, between the shielding plate and the distance bolt there is a toothed disk for better electric contact. This must not remain loose in the device and must be remounted.
- Loosen the holding of the Eprom base by pressing up the orange lever, remove EPROMs
- Press lever downwards, carefully insert new EPROMs sidewards; all IC legs must click into place in the base
- Change memories IC4, IC5, IC32 and IC33 in this way

  IC4 memory is programmed 40214-931.01

  IC5 - " - 40214-932.01

  IC32 - " - 40214-933.01

  IC33 - " - 40214-934.01

  Please observe the characteristics of pin 1
- Once again check that the EPROMs are in position

Various additional jobs are to be carried out depending on the PCB and software version:

Software change	Part No. MCP 51	Additional measures
2.xx → 4.xx	40214-740.00 (02)	b),c)
2.xx → 4.xx	40214-740.00 (03)	b),d)

b) Insert battery-backuped RAM Part No. 8305-148-226 in base IC7

c) Solder wire connection from IC5/Pin27 to IC1/Pin45

d) Scratch up soldering strap LBR 10 (underside of PCB MCP 51) and solder in the direction of the female multipoint connectors to the base plate.

If your device is software version 3.xx or more, none of the works b) to d) are to be carried out.

- Refasten shielding, by inserting toothed disk between shielding plate and distance bolt
- Place both plates again in female multipoint connector base plate.
- If necessary, reattach plugs from IEEE 488 card
- Make sure all flat cables are in correct position
- When switching on for the first time, the RESET button beside the ON/OFF switch is to be pressed and held down for approx. two seconds after activating the ON/OFF switch. The device now indicates that it is carrying out a RESET. The set device configuration, with the exception of the color carrier phase, is lost.

Carry out adjustments as described in Point 1.2

Attention! The relevant security measures should be followed for all work on an open device under voltage.

- Disconnect device from supply voltage
- Thread in the back and front fixing brackets for PCBs and fasten
- Press loosened shielding cable and new connection between MCO 50 and MCV 52 into the supports
- Set upper housing shell in place and screw on tightly

1.2 Adjustment

The PCB is pre-checked and adjusted ex works. However, there are still some adjustments necessary. Please note that the technical data can only be guaranteed when excellent measuring instruments have been used and the adjustment has been carried out carefully.

Measuring instruments: Oscilloscope (>100 MHz), video level measuring instrument

The following is valid for all adjustments:

- Device should be in operating conditions, > 10 minutes
- Carry out a RESET, in order to bring the device into its base configuration
- Synchronize video level measuring instrument externally

- Adjustment of luminance amplitude
  Test pattern YC_BC_R (for some devices User Def 1), select 5 step linear staircase (via key Configurate, Signals/Outputs, YC_BC_R, see also 2.2.3 Configuration of component outputs) connect video level measuring instrument to output Y and adjust white value with R422 to 700 mV ±3 mV.
- Adjustment of synchronous pulse amplitude
  Connect video level instrument to output Y, switch on synchronous pulse (see 2.2.3. Conf...) and adjust with R203 to 300 mV ±2 mV.
- Adjustment of C_B amplitude
  Test pattern YC_BC_R (for some devices User Def 1), select 5 step staircase, connect video level measuring unit to output C_B and adjust with R522 positive maximum to + 350 mV ± 1 mV, check negative maximum: - 350 mV ± 1 mV.
- Adjustment of C_R amplitude
  Test pattern YC_BC_R 2 (for some devices User Def 1), select 5 step staircase, connect video level measuring unit to output C_R and adjust with R622 positive maximum to + 350 mV ± 1 mV, check negative maximum: - 350 mV ± 1 mV.
- Adjustment of offset multiburst (from PCB index 02)
  Call up test pattern multipulse EBU, switch multiburst off at Y and measure the amplitude of the reference bar at the beginning of line. Switch multiburst on at Y and adjust reference bar at the beginning of line with R 323 to the same value that it switched multiburst off Y at (700 mV ± 1 mV).
  Connect oscilloscope to output ($Y_{(S)}$, black image, synchronous pulse switched off at Y, ITS switched off, multiburst on at Y, oscilloscope at 5 mV/div, check step at end of blanking gap, < 3 mV.

- Adjustment of multiburst amplitude
  Select test pattern multiburst packets up to 6 MHz, switch on multiburst at output Y (see 2.2.3 Conf...), connect output Y with oscilloscope (terminate with 75 Ω, trigger with H on each line) and adjust multiburst at R118 so that the oscillations just about reach the reference values 0 mV and 700 mV visible in the background. Balance the non-adjustable remaining errors.

- Adjustment of offset Y; multiburst remainder at multipulse
  Select multipulse test pattern Mltp 20, switch on multiburst at Y, connect oscilloscope at output Y, (terminate with 75 Ω, trigger with H at each line) using the resistor R441 and adjust the signal remainder visible between the last five multipulse packets to a minimum.

- Adjustment of multipulse amplitude
  Select multipulse test pattern EBU, switch on multiburst at Y, connect oscilloscope at output Y (terminate with 75 Ω, trigger with H at each line) and adjust the amplitude of the multipulse packets with the resistor R446 so that the amplitudes of the multipulses amount to 700 mV with 4 or 4.5 MHz (the reference white line and the multipulse packets up to 3 MHz are decisive) and results in as even a ground as possible.

- Adjustment of multiburst amplitude on CVBS
  Due to the additional burden at the output of the multiburst card, the amplitude of the multiburst signal on CVBS can be influenced.
  Select test pattern multiburst packets up to 6 MHz, connect output CVBS with oscilloscope (terminate with 75 Ω, trigger with H on each line) and adjust multiburst to R200 on the PCB MCV50 so that the oscillations just about reach the reference values 0 mV and 700 mV visible in the background. Balance the non-adjustable remaining errors.

Professional Video Generator VG 1100

MOUNTING INSTRUCTIONS

SECAM Option

GRUNDIG
electronic

The figures in () in the following text are identical with the reference numbers of the illustration on page 3 of the operation instructions of the basic device.

1. Mounting

1.1 Preparation / Installation

Installing the option into the VG 1100 is possible from the 2.xx software version onwards. The software version number will be displayed when pressing the **TEXT/TIME** key on the **CONFIGURATE (3)** keyboard. The following menu is then on the display:

```
text     clock     language
```

Press softkey "text", "clock" or "language" and then the language (German or English) which is selected at the moment. The software version number will then be displayed for some seconds.

Tools and measuring instruments required for mounting:
Hex wrench 2 mm, Philips screwdriver, trimming tool, oscilloscope with 75-Ω-terminating resistor or a wave form monitor.

- Disconnect unit from mains.
- Loosen the fixing screws of the upper casing (2 each on the left and on the right and one at the back in the middle), remove upper casing.
- Remove holding rail.
- If your VG 1100 is not equipped with a PAL/NTSC color card the solder strap LBR 1 on the SECAM card has to be closed and the connection cable to the video card MCV 50 has to be installed as shown in the illustration on the next page.

1.2 Adjustment

- Plug in VG 1100 and switch on.
- Select test pattern with color bar 100/0/75/0.
- Connect the oscilloscope with the 75-Ω-terminating resistor or the wave form monitor with the CVBS output, set time base and triggering so that two video lines are displayed.
- Press **Amplitude (7) Compo** key and softkey **CAL** twice to set standard level, select SECAM standard
- The following oscillogram has to be displayed on the oscilloscope

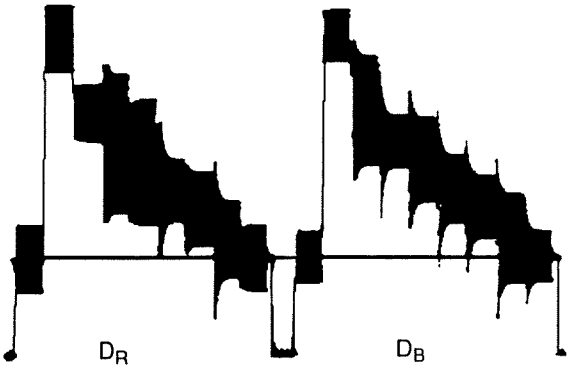

SECAM signal color bar 100/0/75/0

- Select a grey area.
- Adjust color amplitude of the D_B line (line with lower color amplitude) with R 50 on SECAM card to 167 mV_{pp}.
- Disconnect unit from mains.
- Screw holding rail and casing top back on, be careful not to jam any cables between housing and holding rail.

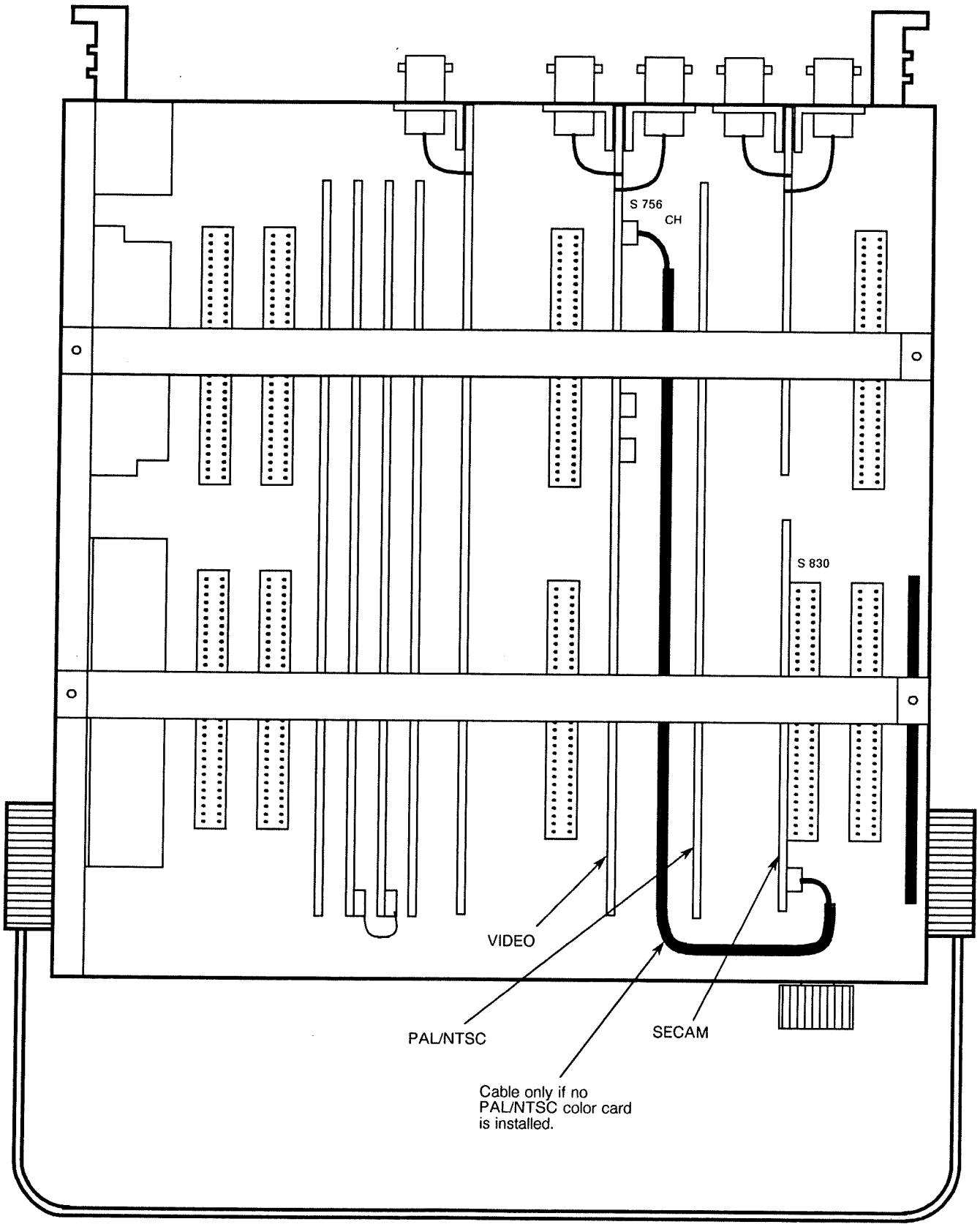

Insertion drawing SECAM

Professional Video Generator VG 1100

MOUNTING INSTRUCTIONS

Option TXT/VPS

GRUNDIG
electronic

1. Mounting

1.1 Preparation / Installation

Tools and measuring equipment required for mounting:
Hex wrench 2 mm, Philips screwdriver, trimming tool, oscilloscope with 75-Ω-terminal resistor or wave form monitor.

Attention: VG 1100 and option TXT/VPS have MOS-components sensitive to electrostatic charge. Therefore attention has to be paid to the regulations valid for handling of MOS-components.

- Disconnect unit from mains
- Screw out the fixing screws of the upper half of the casing (2 each on the right and left side, one in the middle on the rear side), remove cover
- Remove the front holding rail
- Insert the supplied connecting cable into the assigned socket St1 of the TXT/VPS card
- Insert the PCB TXT/VPS into the plug-in location S 870 of VG 1100 (on the very right on front)
- Insert connecting cable into socket S 757, 'VT-VPS' of PCB MCV 50 (see drawing on the next page).
- Connect VG 1100 to the mains and switch on

1.2 Adjustment

- Connect oscilloscope with 75-Ω-termination or wave-form monitor to the CVBS output; then adjust time base and triggering in a way that one line is displayed
- Adjust standard level by activating the key **Amplitude Compo.** two times and softkey **CAL**, select standard PAL B/G
- Display the teletext on the whole screen via key **TXT** and softkey **Pict** of the VG 1100
- Adjust the amplitude of the teletext signal to 462 mV (66% of white level) at setting resistor R 25 on the teletext board (at right edge of the PCB directly above the connecting cable) by means of a trimming tool
- Disconnect unit from mains
- Screw on again the holding rail and the housing half; when doing so, pay attention that no cables are jammed between casing and holding rail.

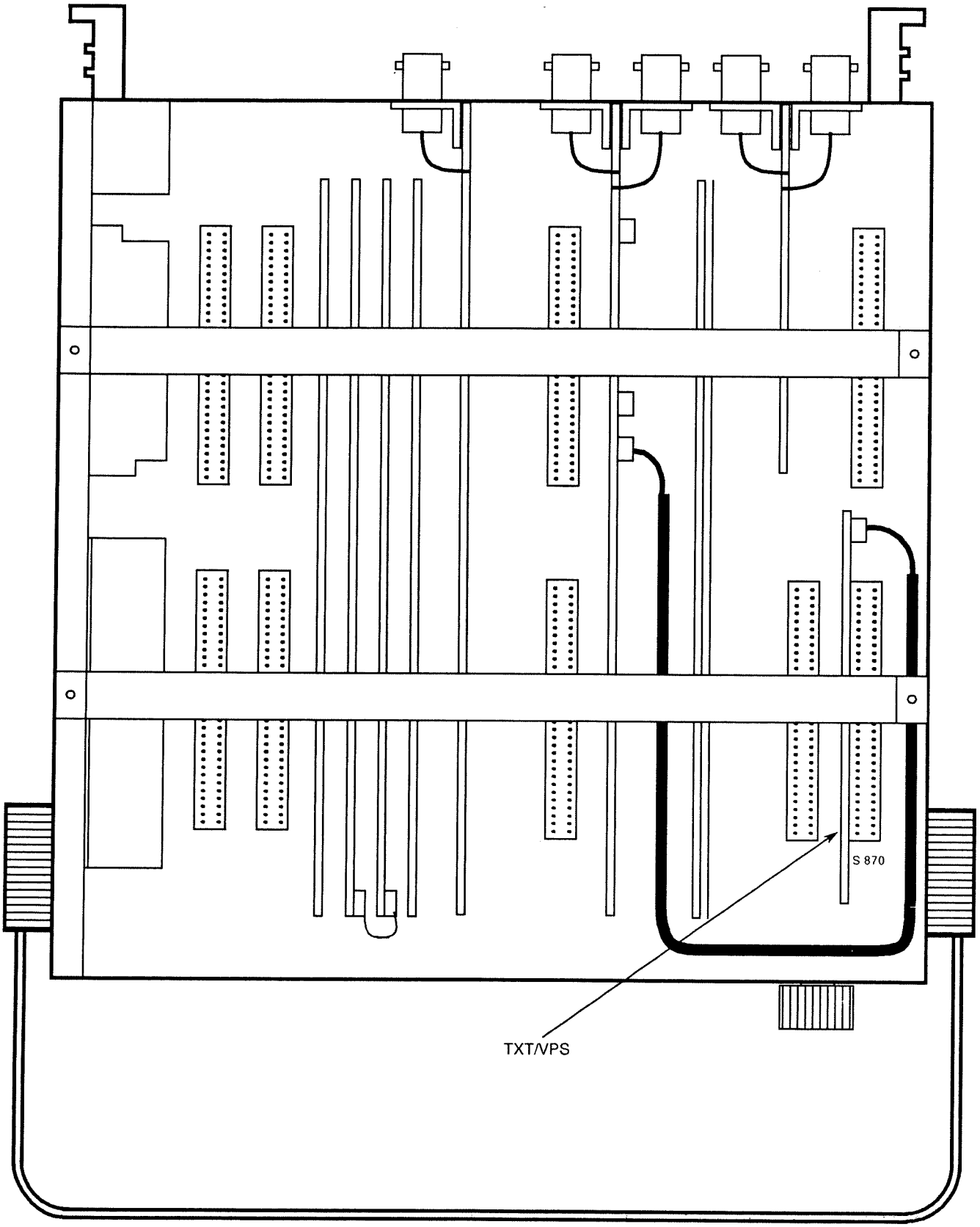

Insertion drawing TXT/VPS

Professional Video Generator VG 1100

MOUNTING INSTRUCTIONS

Option IEEE-488

GRUNDIG
electronic

The numbers in () in the following texts are identical with the position numbers of the figure on page 3 of the Operating Instruction of the basic unit.

1. Mounting

1.1 Preparation / Installation

Prerequisite for operating option IEEE-488:

The VG 1100 software version must be 3.02 or higher. If necessary, exchange four EPROMS and install additional RAM.

You can determine the software version by the following process:

After pressing the key **CONFIG TEXT/TIME (3),** the LC display shows the following menu:

```
text     clock     language     IEEE
```

Press softkey **language**, then choose the desired language. The software version number is then displayed for approx. 5 s in the LCD.

Tools required for mounting:

- Philips screwdriver
- Hex wrench 2 mm
- Open-end wrench 5.5 mm and 7 mm

Mounting

Attention: VG 1100 and IEEE-488-card have MOS components sensitive to electrostatic discharge. Please observe therefore the regulations valid for handling MOS components.

- Disconnect VG 1100 from mains
- Loosen the fixing screws of the upper half of the housing (two screws each on the right and left side, one screw on the rear side in the middle)
- Remove fixing screws of the rear panel cover (four screws on the bottom, two screws each on top and bottom in the middle)
- Remove plastic cover from the opening for IEEE-488
- Remove rear panel cover
- Fix attached spacing roller by countersunk screw according to drawing
- Reattach rear panel cover by mounting the bottom and the fixing screws
- Fix PCB MCI 52 according to drawing
- Insert flat cable of the IEEE-488-card into pin connector S2 of PCB MCP 51
- Close casing again

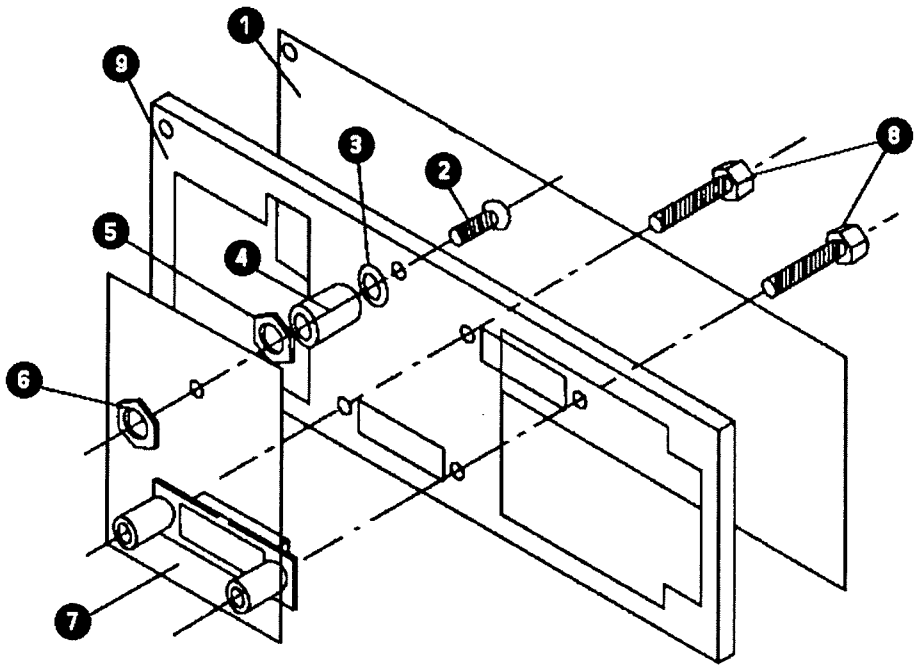

1	VG 1100 rear panel cover
2	Countersunk screw
3	Retainer washer
4	Spacing roller
5, 6	Nut
7	PCB MCI 52 (IEEE-488)
8	IEEE socket screws
9	Rear panel VG 1100

Professional Video Generator VG 1100

MOUNTING INSTRUCTIONS

Option Test Pattern 16:9

GRUNDIG
electronic

1. Software exchange VG 1100

Note: The software exchange may only be carried out by qualified personnel.
Please study these instructions thoroughly before starting work.
The ICs which are to be exchanged are sensitive to static discharges. They should not be removed from the protective packing before installation. Please observe the protective precautions for the handling of MOS components.

The activities to be carried out and the required parts depend on the desired software modification and the version number of the pcb MCP 51 in the unit.
Please consult table 1.

You may request the installed software version by pressing the key TEXT/TIME. The following menu will appear on the LCD:

```
text      clock      language
```

Press "language" and then the current language. The version no. will be displayed for some seconds. From software version 5.10 onwards, the software edition is also displayed when switching on.

Tools and measuring instruments required for installation:

Hexagonal wrench 2 mm, Philips screwdriver, tweezers, and, if necessary, a soldering bit, insulated wire approx. 100 mm in length

Installation:

- Disconnect unit from mains
- Remove fixing screws of the upper half of the casing (2 screws each on left and right, one at the back in the middle), remove cover
- Remove both holding rails
- If the unit is equipped with an IEEE-488 interface, remove connection between IEEE-card and pcb MCP 51
- Unplug the two pcbs 'MCP 50' and 'MCP 51' together (refer to drawing) and place them on a non-conductive surface
  (Danger of short-circuiting the battery on MCP 50)
- Remove the shielding plate from MCP 51
- Depending on the pcb index of the board MCP 51 and the desired software modification, the measures listed in table 1 have to be carried out

a): exchange of a GAL and the Eproms:
IC 3: 40214-400.06
IC 4: 40214-416.xx
IC 5: 40214-426.xx
IC 32: 40214-436.xx
IC 33: 40214-446.xx

b): insert battery-backuped RAM part no. 8305-148-226 in socket IC7

c): remove wire connecting IC5/pin27 with ground, connect IC5/pin27 with IC1/pin45 via an insulated wire

d): resolder the soldering strap LBR 10 (underneath side of MCP 51) as shown in drawing.

Table 1:

Software exchange	ev. no. MCP 51	work and parts
2.xx -> 6.xx	40214-740.00 **(02)**	a), b), c)
2.xx -> 6.xx	40214-740.00 **(03)**	a), b), d)
3.xx - 5.xx -> 6.xx	all	a)
6.xx -> 6.yy	all	a)

- Release clamping of the Eprom base by pushing the orange lever upwards, remove Eproms.
- Press lever downwards, insert the new Eproms carefully the right way up; all IC legs must click cleanly into the base.
- Check again to ensure perfect fit of Eproms
- Screw the shielding plate onto the MCP 51 again
- Insert MCP and MCP51 into the baseplate together; if necessary, reconnect plug of IEEE card
- Fix the holding rails
- Connect unit to mains and switch on
- Activate the reset key on the operating panel during power-on; "RESET" must appear on the LCD and the FuBK test pattern must be built up after a few seconds.

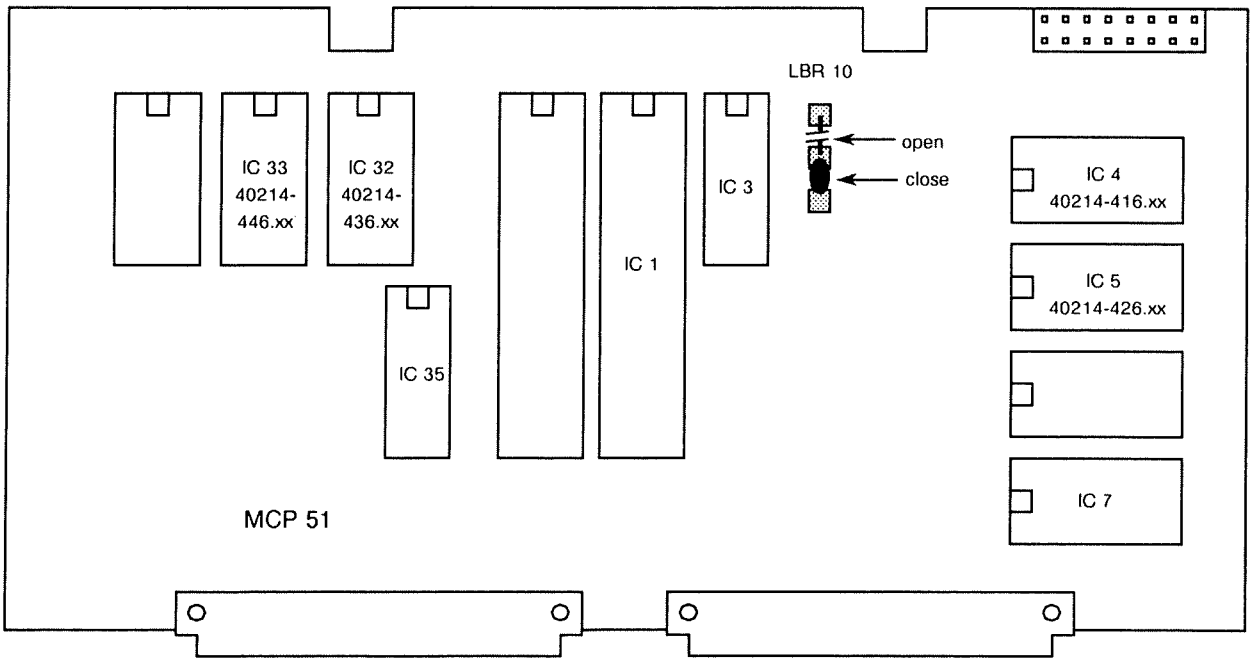

Professional Video Generator VG 1100

MODULES AND ADJUSTMENT OPTIONS

GRUNDIG
electronic

Overview: Modules and adjustment options

1. Basic unit

40214-700.00 MCG 50 base plate

- no adjustment possible

40214-710.00 MTC 50 clock generator module

-	R 295	Oscillator frequency (4.5 MHz ± 5 kHz)
-	L 210	Tuning frequency for clock oscillator (5-6 V)
-	L 200	Tuning frequency for pixel clock (5-6 V)
-	R 119	Sequencs of 8 cross coupling (see PV)
-	L 100	Secam synchronization (see PV)

40214-720.00 MCO 50 multiburst module

-	R 20	1st packet frequency (0.51 MHz/.5 MHz)
-	R 33	6th packet frequency(5.8 MHz)
-	R 29	Stop frequency (20 MHz)
-	R 94A	Amplitude at 1 MHz (710 mV)
-	R 112	Symmetry at 1 MHz (< 2 mV)
-	R 78	Harmonic wave interval (> 40 dB)
-	R 97	Zero point (0 mV)

40214-730.00 PAL/NTSC MCC 50 color module

-	R 341	XTAL temperature (60°)
-	L 101, L102	Color subcarrier module frequency (2 V_{pp} ± 0,2 V)
-	R 313	Color subcarrier module frequency (PAL B/G: 4.433619 MHz)
-	R 314	Color subcarrier module frequency (NTSC M : 3.579545 MHz)
-	R 315	Color subcarrier module frequency (PAL M : 3.575611 MHz)
-	R 316	Color subcarrier module frequency (PAL N : 3.582056 MHz)
-	R 223	Residual carrier U (minimum)
-	R 227	Residual carrier V (minimum)
-	L 201, L 202	Burst envelope curve (see PV)
-	R 208	90° phase (see PV)
-	L 209	Color transitions (see PV)
-	R 270	V component (see PV)
-	R 243A	U component (see PV)
-	R 221	Burst amplitude (300 mV_{pp})
-	R 275, L 210	NTSC color (see PV)

40214-740.00 MCP51 µP module

-	R 1	LCD contrast

40214-750.00 MCV 50 video card

- R 200 multiburst amplitude (same value as 100% white)
- C 208, C 337 multiburst frequency response (up to 6 MHz ± 2 %, over 6 MHz ± 5 %)
- R 681 Y amplitude (700 mV ± 3 mV in the case of white bar)
- R 356 sync level (300 mV ± 2 mV)
- L 301, L 304 2T wave form (see PV)
- L 305, L 306 sync wave form (see PV)
- R 338 sync burst timing (see PV)
- R 408 black burst offset (> ± 2 mV)
- R 404 chroma residue (< ± 3 mV)
- R 435 sync ampl. (black burst output) (300 mV ± 3 mV)
- R 426 timing Sc-H phase (max. ± 20 nsec)

40214-760.00 MCB 50 control board

- no adjustment possible

40214-770.00 MCP 50 sequence control

- C 107 clock frequency (T = 1 sec)
- R 102A test pattern timing (see PV)

40214-780.00 MCM 50 YUV memory module

- no adjustment possible

40214-790.00 MCS 50 switched-mode power supply

- no adjustment possible

40214.800.00 MCS 51 transformer module

- no adjustment possible

2. Options

40214.820.00 MCV 52 component module

- R 422 Y amplitude (700 mV ± 1 mV)
- R 522 Cb amplitude (350 mV ± 1 mV)
- R 622 Cr amplitude (350 mV ± 1 mV)
- R 323 MB offset (0 mV ± 1 mV)
- R 446 Multipulse amplitude (4 MHz: 700 mV)
- R 441 Y offset (see PV)
- R 118 MB amplitude (700 mV ± 1 %)
- R 203 Sync amplitude (300 mV ± 2 %)

40214-830.00 SECAM MCC 51 color module

- R 51, R 52 color carrier rest frequencies (4.25 MHz ± 2 kHz)
  (4.40625 MHz ± 2 kHz)
- L 9, R 39, L 10, L 8 bell curve (see PV)
- R 50 color amplitude (Db: 166.7 mV_{pp}) (Dr: 214 mV_{pp})
- R 8 Db frequency deviation (see PV)
- R 40 Dr frequency deviation (see PV)

40214-870.00 MCD 50 TXT/VPS module

- L 1 tuning voltage for VPS oscillator (2-3 V)
- L 2 tuning voltage for VT oscillator (2-3 V)
- R 26A DC voltage offset (< 10 mV)
- R 25 VT amplitude (462 mV ± 5 mV)
- L 3, L 4 Run in/frame ID word level difference (< 25 mV)

40214-880.00 MCI 52 IEEE 488 module

- no adjustment possible

40214-890.00 MCD 51 digital parallel interface

- R 120 clock/H timing (see PV)

VG 1100 final adjustment
(Quick adjustment)

CVBS output

Connect oscilloscope to CVBS socket; terminate with 75 Ω
Connect vectorscope to CVBS socket; terminate with 75 Ω
Connect spectrum analyzer to CVBS socket; terminate with 75 Ω
Connect counter to Sc socket
Select 100/0/75/0 color bar and Chroma on

MCC 50 PAL/NTSC color module

Color subcarrier frequencies

R 313	PAL B/G	4.433619 MHz	±1 Hz
R 314	NTSC M	3.579545 MHz	±1 Hz
R 315	PAL M	3.575611 MHz	±1 Hz
R 316	PAL N	3.582065 MHz	±1 Hz
R 223, R 227 residual carrier at minimum			
R 208	90° phase		<2 mV
R 270	V component		
R 243A	U component		
R 221	Burst amplitude	300 mV	±3 mV

Disconnect circuit from St 1 (MC 050)

MCV 50 video module

R 681 Video amplitude (white) 700 mV ±3 mV
R 356 Sync level 300 mV ±3 mV

MCC 50 PAL/NTSC color module

Select ITS 17
R 270 Difference between chroma amplitude and 20T amplitude
<0.5%

MCV 50 video module

R 666 Y/Chr operating time <1 nsec
R 338 Sync/burst timing Δ t = 5.6 µsec ±50 nsec

Connect circuit to St 1 (MC 050)

MC 050 multiburst module

Select ITS 18
R 20 1st packet frequency 0.51 MHz ±5 kHz
(ab LP-Index 04: 0.5 MHz ±5 kHz)
R 33 6th packet frequency 5.8 MHz ±1%
Select MB packet 1-20 MHz

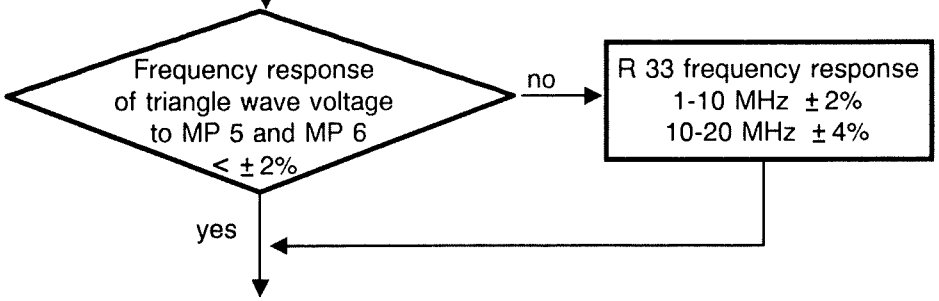

Select sweep over video 1-20 MHz
R 29 freq. response of triangle wave voltage to MP 5 and MP 6 < ±2%
Check start frequency 1 MHz ±25 kHz
Check stop frequency 20 MHz ±0.8 MHz
Select 2 MHz fixed frequency
R 94A ampl. (at 2 MHz) to St 1 (MC 050) 710 mV ±5 mV
(from pcb index 04: 700 mV ±5 mV)

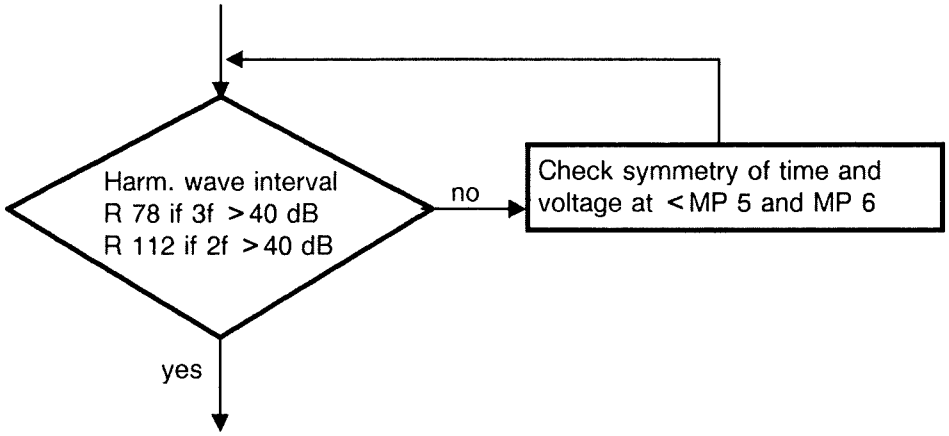

R 97 stage after H blanking gap 0 mV ±2 mV

MCV 50 video module

Select MB sweep over line 1-20 MHz
R 200 MB amplitude at ca. 2 MHz at white value ±2 mV
C 208, C 337 MB frequency response decrease up to 6 MHz <2%
over 6 MHz <2.5%
Frequency response excess <0.5%

Professional Video Generator VG 1100

TEST SPECIFICATIONS

Basic Adjustment

(Primary Adjustment)

GRUNDIG
electronic

List of Test Instruments

	MCS 51	MCS 50	MCI 51	MCB 50	MCP 51	MCP 50	MCM 50	MCT 50	MCC 50	MCV 50	MCO 50	MCC 51	MCD 50	MCV 52
Voltmeter, $3^1/_2$ places	●	●	-	-	-	●	-	●	-	-	-	-	-	-
Oscilloscope 100 MHz	-	●	●		-	-	-	●	●	●	●	●	-	●
Vectorscope PAL	-	-	-	-	-	-	●		●	●	-	-	-	
Vectorscope NTSC	-	-	-	-	-	-	-	-	●	-	-	-	-	-
Vectorscope SECAM	-	-	-	-	-	-	-	-	●	-	-	●	-	-
Frequency counter 2×10^{-7}	-	-	-	-	-	●	-	●	●	-	-	-	-	-
CVBS monitor	-		-	●	●	●	●	-	-	-	-	-	-	-
Thermometer	-	-	-	-	-	-	-	-	●	-	-	-	-	-
Video level meter	-	-	-	-	-	-	-	-		●	-	-	-	●
Spectrum analyzer 0.1-100 MHz with marker or counter function	-	-	-	-	-	-	-	-	-	-	●	-	-	-
Load 50 Ω 1 %	-	-	-	-	-	-	-	-		●	-	-	-	-
75 Ω 1 %	-	-	●	-	-	-	-	-	●	●	-	-	-	●
600 Ω 1 %	-	-	●	-	-	-	-	-	-	-	-	-	-	-
High-voltage test equipment	-													

Test specifications for VG 1100

Procedure	Measuring equipment	Point of measurement	Actuator	Setpoint value
1. MCS 51 transformer module				
a.) Check secondary voltage	Voltmeter	St 1 and St 2		22 V_{eff} ±2 V
2. MCS 50 mains part				
a.) Check output voltages: +5 V	Voltmeter	S1 11 A		5.1 V (4.9 to 5.4 V)
b.) +12 V	Voltmeter	S1 21 A		12 V (11 to 13 V)
c.) −12 V	Voltmeter	S1 27 A		-12 V (-11 to -13 V)
d.) −5 V	Voltmeter	S1 30 A		-5 V (-4.75 to -5.25 V)
e.) Check Reset (only for 1st product batch)	Oscilloscope	Channel A: +5V Channel B: S1 31 B		After a time between 0.5 and 1 s the reset pulse will have exceeded +2.5 V. Reset pulse has the form of a loading function.
3. MCI 51 pulse output-stage module				
Select the following pulse forms in the menu "CONFIGURATE SIGNALS OUTPUT:				
a.) Pulse outputs: 0 → Neg 0 → Pos Neg → 0 Pos → 0	Oscilloscope	All pulse outputs (rear panel) terminated with 75 Ω (P, V, S, K, H, A)		2 V_{pp} ±0.15 V max. Offset 0.2 V pulse form as selected in menu
Operate Reset key	Oscilloscope	All pulse outputs (rear panel) terminated with 75 Ω (P, V, S, K, H, A)		Pulses must be in the form 0 → Neg
b.) AF outputs	Oscilloscope	500 Hz output	R 130	1.4 V_{pp} ±0.1 V Period: 1.95 ms max. offset: 0.2 V
		1 kHz output	R 110	1.4 V_{pp} ±0.1 V Period: 975 µs max. offset: 0.2 V

Procedure	Measuring equipment	Point of measurement	Actuator	Setpoint value
4. MCP 51 µP module / MCB 50 operator part				
a.) LCD contrast		LCD	R 1	Max. contrast
b.) Function of the operator processor, (Select various test patterns)		LCD		The LCD must display the selected test pattern.
c.) Function of the operator processor, (Select FuBK test pattern)	Monitor	CVBS output		Test pattern must be visible after ca. 20 s; note circle and multiburst.
d.) Battery RAM Switch off unit, switch on again after ca. 15 s. (Do not execute this test with FuBK test pattern)	Monitor	CVBS output		The test pattern present before switch-off must appear.
e.) Reset (only from pcb index 04!)	Oscilloscope	MCP 51 IC 1, Pin 39		Must remain on Low 100-200 ms after switch-on.
5. MCP 50 sequence control system / MCM 50 YUV memory module				
a.) Clock	Frequency counter	MP 3	C 107	Period 1 s ± 1µs
b.) Clock battery Switch on clock, set clock, switch off clock and switch on again after ca. 15 s.	Voltmeter Monitor	Batt 1 CVBS output		min. 1.1 V The current time must be displayed.
c.) Test pattern timing	Monitor	CVBS output	R 102a	No fringing on vertical lines
d.) Test pattern change, select Philips test pattern	Monitor	CVBS output		Visual check
6. MCT 50 signal generator module (SYNC. EXT. must be switched off!)				
a.) Check reference voltage	Voltmeter	S 710 7A		2.5 V ± 25 mV
Select NTSC 4.43 standard				
b.) Oscillator frequency for cross coupling	Frequency counter	MP 201	R295	4.500 000 MHz ± 5 Hz
c.) Tuning frequency for clock oscillator	Oscilloscope	MP 203	L 201	5 to 6 V
d.) Tuning frequency for pixel clock	Oscilloscope	MP 200	L 200	5 to 7 V

Procedure	Measuring equipment	Point of measurement	Actuator	Setpoint value
Select PAL B/G standard				
e.) Tuning voltage for cross coupling	Oscilloscope	S711 26 B		±500 mV superimposed AC voltage max. 200 mV
Select PAL N *Select PAL M* *Select NTSC M* *Select SECAM*	Oscilloscope Oscilloscope Oscilloscope Oscilloscope	S711 26 B S711 26 B S711 26 B S711 26 B		Voltage may not change significantly. After a build-up time of ca. 10 s, the superimposed AC voltage must be a max. of 200 mV.
f.) Pixel clock frequency	Frequency counter	MP 202		13.500 000 MHz ±15 Hz
Select SECAM				
g.) H pulse timing	Oscilloscope	H output		Period: 64 µs Pulse duration: 7.25 µs
h.) A pulse timing	Oscilloscope	A output		Period: 64 µs Pulse duration: 12 µs
i.) K pulse timing	Oscilloscope	K output		Period: 64 µs Pulse duration: 7 µs
Select PAL B/G				
j.) K pulse timing	Oscilloscope	K output		Period: 64 µs Pulse duration: 2.25 µs
k.) P pulse timing	Oscilloscope	P output		Period: 128 µs Pulse duration: 4.75 µs
l.) V pulse timing	Oscilloscope	V output		Period 20 ms Pulse duration: 640 µs
Select NTSC				
m.) V pulse timing	Oscilloscope	V output		Period 16.6 ms Pulse duration: 640 µs

Procedure	Measuring equipment	Point of measurement	Actuator	Setpoint value
Ext. Synchronisation PAL				
Supply standard CVBS or black burst signal having the correct sequence of 8 and Sc and H phases (1 V_{pp}) to GenLock socket. Terminate second GenLock socket with 75 Ω. *Press SYNC. EXT. , select PAL B/G standard.*				H Lock and Sc Lock LED must light up
n.) H phase shift	Oscilloscope	Channel A: GenLock signal Channel B: CVBS output VG 1100	Variation	H phase shift > ±2.5 µs
o.) Colour subcarrier cross coupling	Oscilloscope	Channel A: Color subcarrier of source generator Channel B: Sc output		Both colour carriers must be cross coupled without jitter.
p.) Colour subcarrier shift	Oscilloscope	Channel A: Color subcarrier of source generator Channel B: Sc output	Variation	> 350 ns
q.) Sequence of 8 cross coupling (only executable when the 8 V pulse of the source generator is present.)	Oscilloscope	Channel A: 8 V pulse of source generator Channel B: MP 101	R 119	Trigger
r.) Select NTSC standard				Sc Lock LED must go off
s.) Disconnect source generator				H Lock LED must go off
Ext. synchronisation SECAM Supply standard SECAM signal (black single color raster) of 1 V_{pp} to GenLock socket.				
t.) Terminate second GenLock socket with 75 Ω. Select SECAM standard and SYNC. EXT.	Oscilloscope	Channel A: CVBS output Channel B: MP 103	L 100	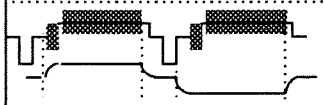 Note symmetry on channel B!

Procedure	Measuring equipment	Point of measurement	Actuator	Setpoint value
u.) H phase shift	Oscilloscope	Channel A: CVBS output Channel B: S 711 22 B		Signals must be cross coupled. Max. phase shift 4 µs
v.) Reduce CVBS amplitude of the source signal until synchronization is no longer present. Then increase again.	Oscilloscope	Channel A: CVBS output Channel B: Source generator signal		Synchronization must lock in place again when the sync. amplitude of the source generator reaches 150 mV.
7. PAL color module				
a.) Temperature control XTAL Open soldering strap LBR 300	Voltmeter	MP 302	R 341	U = (60 °C – room temp.) × 2 mV ± 1mV
Close LBR 300	Voltmeter	MP 302		Observe voltage: Must adjust itself to max. ±2 mV within 2 minutes.
PAL *Select PAL B/G*				
b.) Color subcarrier voltage	Oscilloscope	S 732	L 101, L102	2 V_{pp} ±0.2 V
c.) Color subcarrier frequencies PAL B/G NTSC M PAL M PAL N	Frequency counter Frequency counter Frequency counter Frequency counter	S 732 S 732 S 732 S 732	R 313 R 314 R 315 R 316	4.433618 MHz ±1 Hz 3.579545 MHz ±1 Hz 3.575611 MHz ±1 Hz 3.582056 MHz ±1 Hz
Color bar 100/0/75/0; PAL; CHROMA ON and CVBS ampl. *Select CAL*				
d.) Residual carrier	Vectorscope	CVBS output	R 223, R 227 (U) (V)	Adjust residual carrier to minimum
e.) Burst envelope curve	Vectorscope	CVBS output	L 201, L 202	Burst envelope curve to min. Adjust overshoot and min. pulse tilt.
f.) 90 ° phase	Oscilloscope	CVBS output	R 208	Flickering on color bars <2 mV

Procedure	Measuring equipment	Point of measurement	Actuator	Setpoint value
g.) PAL selector switch (PAL + V key depressed)	Vectorscope	CVBS output	"PAL + V" key	Switched vectors must disappear
h.) Chroma off (CHROMA key depressed)	Vectorscope	CVBS output	"Chroma" key	Vectorgram must disappear
i.) Now switch on CHROMA Switch off PAL + V key	Vectorscope	CVBS output	"Chroma" key "PAL + V" key	Vectorgram must appear Vectors must appear
Color adjustment				
j.) Color transitions	Vectorscope	CVBS output	L 209	Connection from green to magenta must go through zero line.
k.) V component	Vectorscope	CVBS output	R 270	Color bars must be within tolerance fields.
l.) U component	Vectorscope	CVBS output	R 243 A	
m.) Burst amplitude	Vectorscope	CVBS output	R 221	300 mV_{pp} ±3 mV
Sc-H phase				< 5 °
n.) Sc-H phase shift CONFIGURATE key; press SIGNALS OUTPUT Sc phase	Vectorscope	CVBS output	"Variation"	Setting range must be > 360 °
Tuning voltage for cross coupling	Oscilloscope	St 730 26 B	Check	±500 mV overlaid AC voltage max. 200 mV
NTSC				
v.) NTSC M; Select CHROMA and color bar 100/0/75/0	NTSC vectorscope	CVBS output	R 275, L 210	Color locations must be in the tolerance field. Check burst amplitude and position.
SECAM				
Press SECAM (Check Secam switch)	Oscilloscope	CVBS output		Typical SECAM signal must be visible

Procedure	Measuring equipment	Point of measurement	Actuator	Setpoint value
8. MCO 50 multiburst module				
Select PAL B/G and ITS 18				
a.) Packet frequencies	Spectrum analyzer terminated with 50 Ω	St 1	R 20 R 33	1st packet 0.51 MHz ± 5kHz from pcb index 04 1st packet 0.500 MHz ±5kHz 6th packet 5.8 MHz ±1 %
Select multiburst packets 1; 3; 5; 7; 10; 15; 20 MHz	Spectrum analyzer terminated with 50 Ω	St 1	Check	1, 3, 5, 7, 10 MHz ±2 % 15, 20 MHz ±4 %
Select sweep over video test pattern 1 ... 20 MHz				
b.) Adjust frequency of sweep over video	Spectrum analyzer terminated with 50 Ω	St 1	R 29	Adjust stop frequency to 20 MHz ± 0.8 MHz Check start frequency of 1 MHz ± 25 kHz
Select multiburst ... 20 MHz test pattern *Repeat the adjusting procedures d.) to g.) several times as the actuators mutually influence each other.*				
c.) Amplitude	Oscilloscope terminated with 50 Ω	St 2	R 94 a	With 1 MHz, adjust to 710 mV_{pp} (from pcb index 04: 700 mV) ±5 mV
d.) Symmetry	Oscilloscope terminated with 50 Ω	St 2	R 112	bei 1 MHz < 2mV
e.) Harmonic wave distance	Spectrum analyzer terminated with 50 Ω	St 1	R 78	> 40 dB
f.) Zero point / Stage after the H blanking interval	Spectrum analyzer terminated with 50 Ω	St 1	R 97	Adjust 0 mV ± 1mV in packet intervals
Select sweep 0.5 ... 10 MHz over line				
g.) Check sweep over line	Oscilloscope terminated with 50 Ω	St 2	Check	Amplitude: 0.5 to 6 MHz < 0.5 %
h.) Select sweep 1 to 20 MHz over line	Oscilloscope terminated with 50 Ω	St 2	Check	Amplitude: 6...20 MHz < 1% (above) <2.5% (below)
i.) Switch markers to variable and move over line	Oscilloscope terminated with 50 Ω	St 2	Check	Decrease in amplitude should be ca. 10%

Procedure	Measuring equipment	Point of measurement	Actuator	Setpoint value
9. MCV 50 video module				
Select FuBK test pattern; set CVBS amplitude to 0 V				
a.) Set CVBS attenuator to 0 mV	Oscilloscope terminated with 75 Ω	CVBS output	Variation (CVBS)	Signal residues max. 20 mV_{pp}
Select CVBS-CAL; *Set CHROMA + BURST attenuators to 0 V*				
b.) CHROMA + BURST attenuators	Oscilloscope terminated with 75 Ω	CVBS output	Variation (Chroma + Burst)	Stage at end of blanking interval max. 7 mV
Press CHROMA CAL key				
c.) Amplitude actuator CHROMA	Oscilloscope terminated with 75 Ω	CVBS output		Stage at end of blanking interval max. 3.5 mV Interf. pulse < 7 mV
Select multiburst sweep over line 20 MHz *Press multiburst ampl. CAL*				
d.) Multiburst amplitude	Oscilloscope terminated with 75 Ω	CVBS output	R 200	With low frequencies, set amplitude to same value as 100% white
e.) Multiburst frequency response	Oscilloscope terminated with 75 Ω	CVBS output	C 208, C 337	Set linear frequency response up to 6 MHz max. ±2 % over 6 MHz max. ±5 %
Select multiburst VTR test pattern; set multiburst attenuator to 0 V				
f.) Multiburst attenuator	Oscilloscope terminated with 75 Ω	CVBS output	Variation (MB)	Signal residues max. 20 mV_{pp}
Press CAL key				
g.) Multiburst amplitude in inspection line (line 18)	Oscilloscope terminated with 75 Ω	CVBS output		Multiburst packets 420 mV ± 8 mV (in line 18)

Procedure	Measuring equipment	Point of measurement	Actuator	Setpoint value
Select color bar 100/0/75/0				
h.) Y and Sync amplitude	Video level meter	CVBS output	R 681	For white bars 700 mV ±3 mV
	Video level meter	CVBS output	R 356	Sync. level 300 mV ±2 mV
CVBS Ampl. Cal. *Select line 17 test pattern*				
i.) 2 T wave shape	Oscilloscope	CVBS output	L 301 to L 304	Adjust amplitude of the 2 T pulse to the white level. Note symmetry, small overshoots and half amplitude width of 200 ns!
Sync wave shape			L 305, L 306	Adjust symmetry of the synchronous pulse. No overshoots!
j.) Chroma-Y-Sync operating time	Oscilloscope	CVBS output	R 270 (MCC 50 module!) R 666 (MCC 50 module!)	Level off floor of the 20 T pulse. Repeat procedure several times if necessary.
k.) Sync/Burst timing	Oscilloscope	CVBS output	R 338	Burst envelope curve and falling Sync. edge must be 5.6 µs ±10 ns apart. (50% point) Note! Sc-H phases are also affected
Select color bar 100/0/75/0 test pattern *Y/C outputs*				

Procedure	Measuring equipment	Point of measurement	Actuator	Setpoint value
l.) Y output voltage	Oscilloscope	Y output	Actuation impossible, depends on CVBS adjustment	White value: 700 mV ±20 mV Sync: 300 mV ±8 mV DC offset: <100 mV
m.) Chr. output voltage	Oscilloscope	C output		Burst: 300 mV_{pp} ±12 mV
Black burst outputs n.) Offset	Oscilloscope	Black burst output	R 408	Minimize stage between burst and visible line, < ±2 mV
o.) Chroma residue	Oscilloscope	Black burst output	R 404	Minimize chroma residue in visible line, < =3 mV
p.) Sync. amplitude	Video level meter	Black burst output	R 435	300 mV ± 3 mV
q.) Burst amplitude	Oscilloscope	Black burst output		300 mV ±30 mV Offset <50 mV
r.) Timing	Oscilloscope	Channel A: CVBS output Channel B: Black burst output	R 426	Falling edges coincident, Max. offset: ±20 ns

Test specifications for options

Procedure	Measuring equipment	Point of measurement	Actuator	Setpoint value
10. Teletext/MCD 50 VPS module				
Switch on Teletext in line 10; configure sensible VPS label				
a.) Tuning voltage for VPS oscillator	Voltmeter	MP 1	L 1	2 to 3 V
b.) VPS clock frequency	Frequency counter	MP 3	Check	5.000 000 MHz ± 50 Hz
c.) Tuning voltage for VT oscillator	Voltmeter	MP 2	L 2	2 to 3 V
d.) VT clock frequency	Frequency counter	MP 4	Check	6.937 500 MHz ± 50 Hz
e.) DC voltage offset of VT/VPS signal	Oscilloscope	St 1	R 26 a	< 10 mV
Switch on Teletext over full frame				
f.) Amplitude of VT signal (without Sync. value)	Oscilloscope	CVBS output terminated with 75 Ω	R 25	462 mV ± 5 mV
g.) VT timing	Oscilloscope	CVBS output terminated with 75 Ω	Check	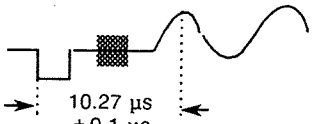
h.) Difference in level without overshoot between run-in and frame ID	Oscilloscope	CVBS output terminated with 75 Ω	L 3, L 4	< 25 mV
Switch on Teletext in line 10; *Switch on VPS over full frame*				
i.) VPS timing	Oscilloscope	CVBS output terminated with 75 Ω	Check	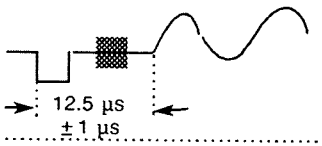
j.) Amplitude of VPS signal (without Sync. value)	Oscilloscope	CVBS output terminated with 75 Ω	Check	500 mV ± 20 mV

Procedure	Measuring equipment	Point of measurement	Actuator	Setpoint value
Represent VPS				
h.) Visual check of Teletext (select all VT pages one after the other)	Monitor	CVBS output	Check	Pay attention to missing or incorrect characters; current time must be displayed; all the selected VT pages must appear.
11. SECAM MCC 51 color module				
Select SECAM standard; Chroma on; ID on; color bar 100/0/75/0				
a.) Video ID	SECAM vectorscope (Wave form representation)	CVBS output terminated with 75 Ω		The typical SECAM oscillogram must appear.
	SECAM vectorscope (Vector representation)	CVBS output terminated with 75 Ω		Large vector on the left below.
Switch off video ID				
b.) Video ID	SECAM vectorscope (Wave form representation)	CVBS output terminated with 75 Ω		The colour subcarrier must appear on the back porch.
	SECAM vectorscope (Vector representation)	CVBS output terminated with 75 Ω		Vector on the left below must disappear.
Switch on video ID				
c.) Color subcarrier rest frequencies	SECAM vectorscope (Frequency representation)	CVBS output terminated with 75 Ω	R 51 R 52	4.25 MHz ±2 kHz 4.40625 MHz ± 2 kHz
d.) Bell curve representation	SECAM vectorscope (Bell curve representation)	CVBS output terminated with 75 Ω	Repeat L 9, R 39, L 10, L 8 one after the other in the specified sequence.	As linear as possible

Procedure	Measuring equipment	Point of measurement	Actuator	Setpoint value
e.) Color subcarrier amplitude	SECAM vectorscope (Wave form representation)	CVBS output terminated with 75 Ω	R 50	In the back porch 166.7 mV_{pp} D_B 214 mV_{pp} D_R
f.) Frequency deviation	SECAM vectorscope (Vector representation)	CVBS output terminated with 75 Ω	R 40 (D_R) R 8 (D_B)	Color locations must lie within the appropriate markings.
12. YC_BC_R /RGB component module MCV 52				
Calibrated component attenuator; Multiburst switched off on all 3 outputs; select 5-step linear scale				
a.) Luminance amplitude	Oscilloscope terminated with 75 Ω	$Y_{(S)}$ output	R 422	White value: 700 mV ±1 mV
b.) C_B amplitude	Oscilloscope terminated with 75 Ω	C_B output	R 522	Reference bar: ±350 mV ±1 mV
c.) C_R amplitude	Oscilloscope terminated with 75 Ω	C_R output	R 622	Reference bar: ±350 mV ±1 mV
Select black video without Sync on Y				
d.) Y offset	Oscilloscope terminated with 75 Ω	$Y_{(S)}$ output		Offset < 20 mV
e.) C_B offset	Oscilloscope terminated with 75 Ω	C_B output		Offset < 20 mV
f.) C_R offset	Oscilloscope terminated with 75 Ω	C_R output		Offset < 20 mV
g.) Readjust the MCO 50 multiburst module: To do this, repeat points 9a.) to 9g.). (See adjustment of MC0 50 multiburst module) Note: Plugs St 1 and St 2 (multiburst module) must always be terminated with 50 Ω in this case. (Signal wires to MCV 50 and MCV 51 must be connected!)				

Procedure	Measuring equipment	Point of measurement	Actuator	Setpoint value
Black video without Sync on Y; ITSsnspection lines off				
h.) Multiburst offset	Oscilloscope terminated with 75 Ω	$Y_{(S)}$ output	R 323	Stage in the blanking interval: 0 mV ±1 mV
Select multipulse EBU *Multiburst switched on at Y*				
i.) Y multiplier Multiburst switched off on Y j.) Y multiplier	Oscilloscope terminated with 75 Ω Oscilloscope terminated with 75 Ω			The reference bar at the beginning of the line may only vary by a max. of 3 mV. Re-adjust to R 323 if necessary. (MB offset max. 3 mV)
Select multiburst SWEEP over line 10 MHz; *Multiburst Y C_B C_R off*				
k.) MB switch-off attenuation Y	Oscilloscope terminated with 75 Ω	$Y_{(S)}$ output	Check	MB residues at 10 MHz < 1mV
l.) MB switch-off attenuation C_B	Oscilloscope terminated with 75 Ω	C_B output	Check	MB residues at 10 MHz < 1mV
m.) MB switch-off attenuation C_R	Oscilloscope terminated with 75 Ω	C_R output	Check	MB residues at 10 MHz < 1mV
Select FuBK test pattern; select multiburst on all 3 outputs; set all component attenuators to 0 V.				
n.) Attenuator Y	Oscilloscope terminated with 75 Ω	$Y_{(S)}$ output	Check	Signal residues < 20 mV_{pp}
o.) Attenuator C_B	Oscilloscope terminated with 75 Ω	C_B output	Check	Signal residues < 20 mV_{pp}
p.) Attenuator C_R	Oscilloscope terminated with 75 Ω	C_R output	Check	Signal residues < 20 mV_{pp}

Procedure	Measuring equipment	Point of measurement	Actuator	Setpoint value
Select EBU test pattern				
q.) Multipulse amplitude	Oscilloscope terminated with 75 Ω	$Y_{(S)}$ output	R 446	Set multipulse 4/4.5 MHz to 700 mV or compare with reference white line
Select multipulse test pattern; Switch multiburst to Y				
r.) Y offset (Multiburst)	Oscilloscope terminated with 75 Ω	$Y_{(S)}$ output	R 441	Set signal residues between the pulses to minimum
Select multiburst packets up to 5 MHz				
s.) Multiburst amplitude Y	Oscilloscope terminated with 75 Ω	$Y_{(S)}$ output	R 118	700 mV_{pp} ±1 %
t.) Multiburst amplitude C_B	Oscilloscope terminated with 75 Ω	C_B output	Check	700 mV_{pp} ±2 %
u.) Multiburst amplitude C_R	Oscilloscope terminated with 75 Ω	C_R output	Check	700 mV_{pp} ±2 %
Select inspection line 18 over whole frame				
v.) Multiburst amplitude (ITS)	Oscilloscope terminated with 75 Ω	$Y_{(S)}$ output	Check	420 mV_{pp} ±2 %
Select MB Sweep over line ... 20 MHz test pattern				
w.) Multiburst frequency response	Oscilloscope terminated with 75 Ω	$Y_{(S)}$ output C_B output C_R output R output $G_{(S)}$ output B output	Check	up to 6 MHz ±2 % >6 MHz ±5 %
Switch sync to Y				
x.) Sync amplitude	Oscilloscope terminated with 75 Ω	$Y_{(S)}$ output	R 203	300 mV ±2 mV

Procedure	Measuring equipment	Point of measurement	Actuator	Setpoint value
Select NTSC standard				
y.) NTSC sync amplitude	Oscilloscope terminated with 75 Ω	$Y_{(S)}$ output	Check	286 mV ±4 mV
Select PAL standard				
z.) Sync amplitude $G_{(S)}$	Oscilloscope terminated with 75 ohms	$G_{(S)}$ output	Check	300 mV ±5 mV
za.) Sync amplitude S	Oscilloscope terminated with 75 Ω	Sync output	Check	– 2 V ±10 % - pay attention to symmetric rounding
Select pulse step test pattern				
zb.) 2 t pulse signal form	Oscilloscope and $\sin^2$ template	$Y_{(S)}$ output $C_{(B)}$ output $C_{(R)}$ output	Check	Ampl. 99.5 % to 100.5 % K ≤ 0.2
Select color bar 100/0/0/0 test pattern				
zc.) RGB matrix	Oscilloscope terminated with 75 Ω	$G_{(S)}$ output B output R output	Check	Pulses must have the same amplitude. The pulse tops must be level.
13. High-voltage test to VDE 0411				
- Switch on at mains - Short-circuit primary winding - Test high-voltage endurance (3 kV) between mains and housing to VDE 0411.				

Professional Video Generator VG 1100

ERROR DETECTION DIAGRAM

GRUNDIG
electronic

VG 1100 Error detection diagram

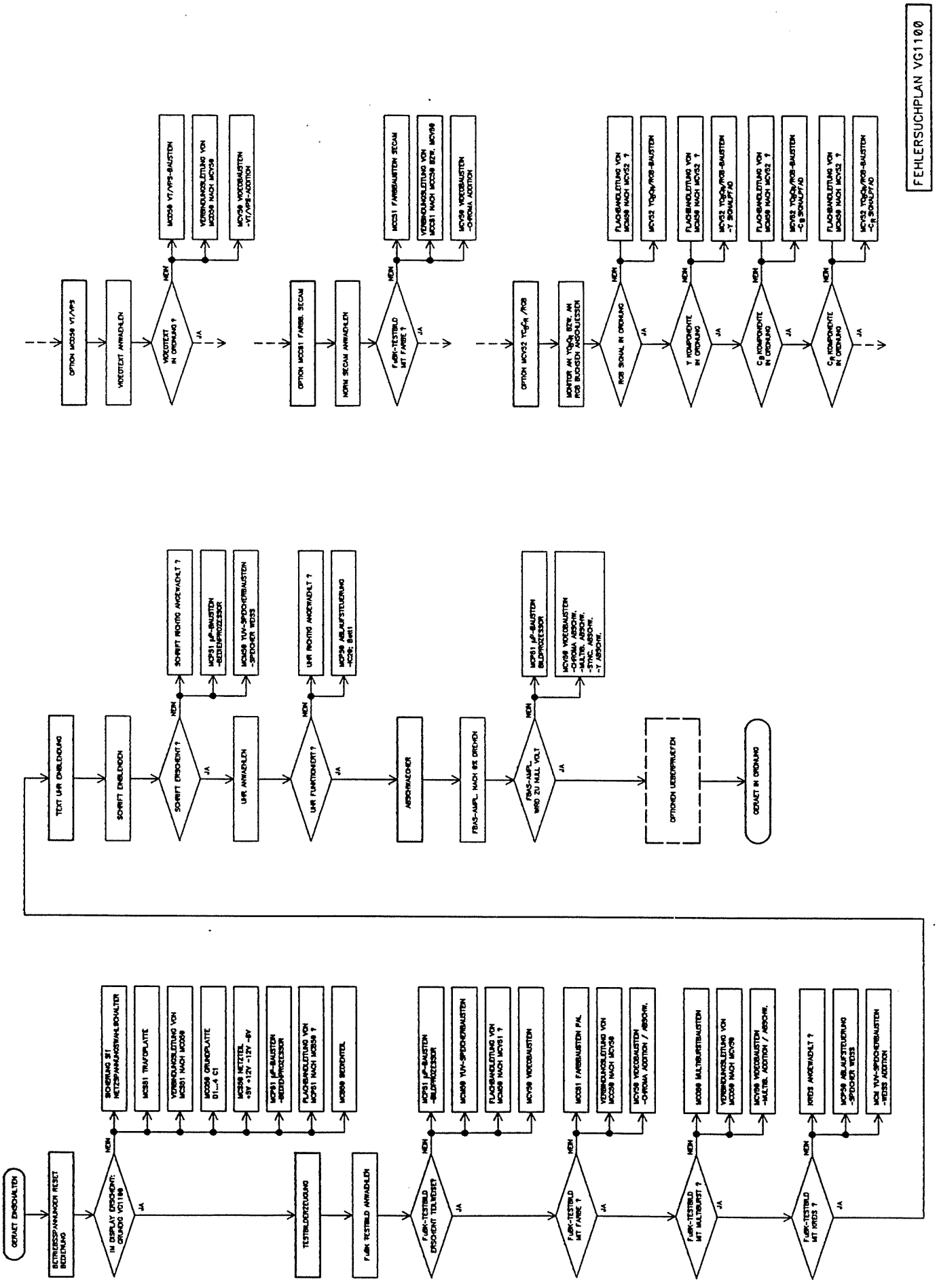

GRUNDIG electronic

Professional Video Generator VG 1100

LIST OF SPARE-PARTS

GRUNDIG
electronic

GRUNDIG ® ERSATZTEIL-LISTE

mit Bruttopreisen
with gross prices
LIST OF SPARE-PARTS

Februar 1990

Prof.
Video generator
VG 1100

9.40214-1101

Pos. Code No.	Photo No.	Bennenung/Bemerkungen	Bestell-Nr. Part-Number	Description/Remarks

Prof. video generator VG 1100

9.40214-1101

Module mechanics

40214-001.00

1		Plug connector CKV 14-pole	41956-101.14
2		Power cable	09690-400.00
3		Foot, cpl. (4x)	40910-025.01
4		Rear panel foot (4x)	40012-102.01
5		Cover (7x)	43003-023.02
6		Handle, cpl.	40011-135.00
7		Handle cap (2x)	40011-131.02
8		Wire spring (2x)	40011-136.00
9		Retainer washer 5.0 DIN 6799 (2x)	8122-405-005
10		Crimp socket (8x)	39616-181.00

Mounting Kit

40214-002.01

11		Knob (6x)	40208-066.04
12		Rod knob	40012-088.01
13		Cap (35x)	40107-057.05

Änderungen vorbehalten – subject to alteration

Pos. Code No.	Bild Pic. No.	Benennung/Bemerkungen	Bestell-Nr. Part-Number	Description/Remark	Preis p. Stück Price p. item DM
		PCB MCG Baseplate 40214-700.00			
14		Multipole connector 32-pole (10x)	41623-021.97		
15		Multipole connector 64-pole (15x)	41623-031.97		
16		Mica washer (4x)	29701-629.01		
17		Clamp (4x)	43240-065.00		
18		Cable clip SST 1 M	8290-990-205		
19		Insulating sheath No. 1-925017-0	8290-001-049		
20		Diode USD 945 (4x)	8309-550-945	D 1/2/3/4	
		PCB MCT 50 Pulse generator 40214-710.00			
21		Male multipoint connector 32-pole	41623-020.97		
22		Male multipoint connector 64-pole	41623-030.97		
23		Pin (5x)	29301-413.14		
24		BNC-HF-socket 75 Ω (3x)	09622-499.00		
25		Insulating ring (3x)	09622-491.00		
26		Cable clip SST 1 M	8290-990-205		
27		Earthing strip (2x)	09622-472.00		
28		Holder C 42121-A40-C14	8290-005-132		
29		Cover	43003-023.02		
30		Diode BB 212 (2x)	8309-510-213	D 200/203	
31		Broadband choke 4312 020 36641 (4x)	8140-530-066	L1/2/3/4	

Pos. Code No.	Bild Pic. No.	Benennung/Bemerkungen	Bestell-Nr. Part-Number	Description/Remark	Preis p. Stück Price p. item DM
32		Video coil	19202-191.97	L 200	
33		Coil	19202-563.97	L 100	
34		Coil	19202-574.97	L 201	
35		Quartz 4.5 MHZ Q 610/2A	8382-243-095	Q 200	
36		Quartz 14.318180 MHZ Q 504/2A	8382-504-142	Q 100	
37		Quartz 17.734475 MHZ Q 335/2A	8382-335-177	Q 101	
38		Setting knob PPK 10 2.2 KΩ LIN FN	8790-247-140	R 119	
39		Setting knob PPK 10 22 KΩ LIN	8790-247-054	R 295	
40		Diode 1 N 4148 (2x)	8309-215-045	D 201/202	
41		Diode BB 609 B / BB 329 B	8309-510-609	D 205	
42		Trans. ESM 2369 WW.PH 2369 LV3369 (2x)	8303-812-369	T 206/207	
43		IC 74 HC 00 N (2x)	8305-180-000	IC 108/203	
44		IC 74 HC 02 N	8305-180-002	IC 109	
45		IC 74 HC 04 N (2x)	8305-180-004	IC 204/206	
46		IC 74 HC 08 N	8305-180-008	IC 106	
47		IC 74 HC 74 N (3x)	8305-180-074	IC 107/114/212	
48		IC 74 HC 86 N	8305-180-086	IC 111	
49		IC 74 HC 245 N	8305-180-245	IC 213	
50		IC 74 HC 4053 N	8305-181-053	IC 100	
51		IC 74 HC 4094 N	8305-181-094	IC 214	
52		IC 74 HC 4520	8305-181-520	IC 105	
53		IC 74 HC 4538	8305-181-538	IC 104	
54		IC DAC 08 HP	8305-135-008	IC 215	
55		IC LM 393P / 393N / IR 9393	8305-204-393	IC 113	
56		IC MC 1403 P1	8305-205-203	IC 200	
57		IC MC 1496 L	8305-205-226	IC 112	

Pos. Code No.	Bild Pic. No.	Benennung/Bemerkungen	Bestell-Nr. Part-Number	Description/Remark	Preis p. Stück Price p. item DM
58		IC NE 521 (2x)	8305-310-521	IC 103/217	
59		IC TBB 200 DIP (2x)	8305-380-200	IC 209/218	
60		IC TBB 278	8305-380-278	IC 211	
61		IC TL 072 A CP (3x)	8305-440-072	IC 101/201/205	
62		IC TL 072 A CP (2x)	8305-440-072	IC 207/210	
63		SMD IC LM 1881 M	8305-761-881	IC 102	
64		SMD-Trans. BC 848 C (5x)	8301-006-848	T 100/101/102/201/202	
65		SMD-Trans. BCV 62	8301-164-062	T 205	
66		SMD-Trans. BFS 20 ON4158/ S 821T	8301-185-020	T 203/204	
			PCB MCO 50 Multiburst 40214-720.00		
67		Male multipoint connector 32-pole	41623-020.97		
68		Male multipoint connector 64-pole	41623-030.97		
69		Plug pin (8x)	29301-413.14		
70		Ferrite pearl VK 210 III B 28 3 MM LG. (13x)	8104-982-013		
71		Multiway connector (upright) (2x)	39616-162.07		
72		Broadband choke 4312 020 36641 (7x)	8140-530-066	L 1/2/3/4/5/6/7	
73		IC MC 78 L 08 ACP	8305-205-728	IC 32	
74		Trans BFR 96 S (6x)	8302-226-097	T 8/9/14/15/20/21	
75		Trans. BFQ 32 S (13x)	8302-225-032	T 5/6/7/12/13/18/19 23/24/27/29/30/32	
76		Trans. ZTX 323 (4x)	8302-994-323	T 25/26/37/38	
77		Setting knob P 47 Ω Ω LIN	8773-297-004	R 97	
78		Setting knob P 100 Ω LIN (2x)	8773-297-009	R 33/78	

Pos. Code No.	Bild Pic. No.	Benennung/Bemerkungen	Bestell-Nr. Part-Number	Description/Remark	Preis p. Stück Price p. item DM
79		Setting knob P 470 Ω LIN	8773-297-025	R 94 A	
80		Setting knob P 10 KΩ LIN	8773-297-051	R 20	
81		Diode 1 N 4148 (6x)	8309-215-045	D 1/2/3/5/6/12	
82		Diode ZTE 1.5 (2x)	8309-714-515	D 8/10	
83		Diode ZTE 2.0 (3x)	8309-714-521	D 4/7/9	
84		Z Diode 4.7 C 0.5W	8309-720-048	D 11	
85		Trans.BC 548 B (2x)	8303-205-548	T 2/22	
86		Trans.BC 558 B (2x)	8303-205-558	T 28/31	
87		Trans.BC 558 C (2x)	8303-207-558	T 3/4	
88		Trans.BC 170	8302-255-170	T 1	
89		Trans.J 310 (2x)	8302-800-310	T 35/40	
90		IC SRAM 8KX8	8305-004-265	IC 6	
91		IC SRAM 2 KX8 25 NC (2x)	8305-004-328	IC 1/9	
92		IC SL 2364 C DP 14	8305-159-264	IC 33	
93		IC 74F/AS 20	8305-174-020	IC 13	
94		IC 74 F/AS 27	8305-174-027	IC 20	
95		IC 74 F/AS 161 (3x)	8305-174-161	IC 15/16/17	
96		IC 74 HC 08 N	8305-180-008	IC 3	
97		IC 74 HC 14 N (2x)	8305-180-014	IC 5/11	
98		IC 74 HC 139 N	8305-180-139	IC 4	
99		IC 74 HC 574 N	8305-180-574	IC 10	
100		IC 74 HCT 02	8305-182-002	IC 19	
101		IC 74 LS 14	8305-197-014	IC 18	

Pos. Code No.	Bild Pic. No.	Benennung/Bemerkungen	Bestell-Nr. Part-Number	Description/Remark	Preis p. Stück Price p. item DM
102		IC 74 LS 27	8305-197-027	IC 14	
103		IC 74 LS 32	8305-197-032	IC 12	
104		IC 74 LS 652 (3x)	8305-197-652	IC 2/7/8	
105		IC MC 10131 P	8305-205-210	IC 30	
106		IC MC 34072 P (2x)	8305-210-072	IC 23/27	
107		IC MC 34082 AP (2x)	8305-210-082	IC 24/26	
108		IC DAC 08 HP	8305-135-008	IC 22	
109		IC OPA 633 KP	8305-541-633	IC 28	
110		IC MB 40778 P	8305-425-778	IC 21	
111		IC SP 9680 DP	8305-100-081	IC 29	
112		SMD-Trans. BCV 61 (3x)	8301-164-061	T 10/16/34	
		PCB MCP 51 CPU-board 40214-740.00			
113		Male multipoint connector 64-pole (2x)	41623-030.97		
114		Multiway connector CKV 26-pole	41956-101.26		
115		Multiway connector CKV 20-pole	41956-101.20		
116		Circuit-board connector 34-pole	44207-034.97		
117		Multipole-connector 34-pole	44207-030.97		
118		Key KEG 10906	44210-031.00		
119		Holder C 42121-A40-C14	8290-005-132		
120		Plug pin	29301-413.14		
121		NIF socket 28-pole (4x)	41956-200.28	IC 4/5/32/33	
122		IC socket DILB 20 P108 (2x)	8130-900-105	IC 31/35	
123		IC socket DILB 48 P 8 J (2x)	8130-900-127	IC 1/30	

Pos. Code No.	Bild Pic. No.	Benennung/Bemerkungen	Bestell-Nr. Part-Number	Description/Remark	Preis p. Stück Price p. item DM
124		Broadband choke 4312 020 36641	8140-530-066	L 1	
125		Quartz 4 MHZ Q 430/2A	8382-241-496	Q 1	
126		Quartz 8 MHZ Q 315/2B	8382-315-008	Q 3	
127		Setting knob PPK 10 1 KΩ LIN FN	8790-247-135	R 1	
128		IC MC 68 HC 11A1P (2x)	8305-210-011	IC 1/30	
129		IC SRAM 8 KXB LOW POWER (2x)	8305-004-265	JC 6/34	
130		IC-socket DILB 28 P108	8130-900-104		
131		IC 74 HC 02 N	8305-180-002	IC 13	
132		IC 74 HC 08 N	8305-180-008	IC 12	
133		IC 74 HC 138 N (2x)	8305-180-138	IC 37/38	
134		IC 74 HC 245 N (4x)	8305-180-245	IC 10/39/40/41	
135		IC 74 HC 573 N (2x)	8305-180-573	IC 2/31	
136		IC 74 HC 574 N (3x)	8305-180-574	IC 8/9/36	
		PCB MCO 50 Video board 40214-750.00			
137		Male multipoint connector 32-pole (2x)	41623-020.97		
138		Multiway connector, module II (3x) No. 825457-7	8290-175-207		
139		BNC-HF-socket 75 Ω (8x)	09622-499.00		
140		Insulating ring (8x)	09622-491.00		
141		Earthing strip (8x)	09622-472.00		
142		Filter coil	09290-782.01	L 302	

Pos. Code No.	Bild Pic. No.	Benennung/Bemerkungen	Bestell-Nr. Part-Number	Description/Remark	Preis p. Stück Price p. item DM
143		Filter coil	09290-783.01	L 301	
144		Filter coil	09290-784.01	L 304	
145		Filter coil	09290-785.01	L 303	
146		Multiway connector (upright) (3x)	39616-162.07		
147		Plug pin (34x)	29301-413.14		
148		Broadband choke 4312 020 36641 (4x)	8140-530-066	L 1/2/3/5	
149		Coil	09296-207.01	L 306	
150		Coil	09296-255.01	L 305	
151		TR.P/ 7.5 / A 2.5-7.5PF (2x)	8699-932-125	C 208/332	
152		Setting knob PPK10 100 Ω LIN FN	8790-247-109	R 404	
153		Setting knob PPK10 220 Ω LIN FN	8790-247-117	R 356	
154		Setting knob PPK10 470 Ω LIN (4x)	8790-247-025	R 435/200/408/666	
155		Setting knob PPK10 2.2 KΩ LIN FN (2x)	8790-247-140	R 338/426	
156		Setting knob PPK10 4.7 KΩ LIN FN	8790-247-146	R 681	
157		Diode 1 N 4148 (6x)	8309-215-045	D 1/303/401/402/403/ 405	
158		Z-Diode 6.8 C 0.5W (2x)	8309-720-068	D 200/300	
159		Z-Diode 8.2 C 0.5W	8309-720-082	D 400	
160		IC HEF 4094 BP (6x)	8305-005-094	IC 103/104/203/204/ 310/312	
161		IC 74 HC 00 N	8305-180-000	IC 106	
162		IC 74 HC 74 N	8305-180-074	IC 309	
163		IC 74 HC 86 N	8305-180-086	IC 308	
164		IC LM 358 P (2x)	8305-204-358	IC 500/609	

Pos. Code No.	Bild Pic. No.	Benennung/Bemerkungen	Bestell-Nr. Part-Number	Description/Remark	Preis p. Stück Price p. item DM
165		IC UPD 6900 (2x)	8305-275-600	IC 701/801	
166		IC AD 847 JN (8x)	8305-092-847	IC 105/300/303/403/404 610/702/802	
167		IC DAC 08 HP (4x)	8305-135-008	IC 102/202/311/313	
168		IC OPA 621 KP (4x)	8305-541-621	IC 307/405/306/314	
169		IC MB 40748-9	8305-425-748	IC 608	
170		SMD IC HC 174 (2x)	8305-786-174	IC 606/607	
171		SMD IC 74 HC 574 (5x)	8305-786-574	IC 600/601/602/603/604	
172		SMD IC CA 3046 M (2x)	8305-201-003	IC 206/305	
173		SMD IC MC 1496 D (4x)	8305-811-496	IC 100/200/301/402	
174		SMD Trans.BC 848 C	8301-006-848	T 402	
175		SMD Trans.BCV 61 (5x)	8301-164-061	T 101/201/312/411/412	
176		SMD Trans.BCV 62 (2x)	8301-164-062	T 205/314	
177		SMD Trans.BFR 92 A (3x)	8301-180-092	T 600/602/606	
178		SMD Trans.BFR 92 AR L (5x)	8301-181-092	T 601/603/604/605/608	
179		SMD Trans.BFS 20 ON4158 (3x)	8301-185-020	T 400/401/607	
			PCB MCB 50 Control unit 40214-760.00		
180		LED holder (35x)	40211-090.00	D 1 - D 35	
181		LED holder	40011-116.00	D 36 - D 38	

Pos. Code No.	Bild Pic. No.	Benennung/Bemerkungen	Bestell-Nr. Part-Number	Description/Remark	Preis p. Stück Price p. item DM
182		Multipole connector 14-pole	44207-038.97		
183		PCB connector 14-pole	44207-039.97		
184		Miniature socket	09622-388.02		
185		Jog key 1-pole (41x)	40107-024.01	TT 1 - TT 41	
186		Knob (35x)	40107-056.02		
187		Momentary contact switch S No.75120-002	8134-020-121	TT 43	
188		Plug pin (3x)	29301-413-14		
189		Broadband choke 4312 020 36641	8140-530-066	L 1	
190		LE Diode LG 3369 FH	8309-974-367	D 37	
191		LE Diode LS 3369 (12x)	8309-974-368	D 9/20/22/24/26/29/31 32/33/34/35/38	
192		LE Diode LY 3369 FH (25x)	8309-975-336	D 1/2/3/4/5/6/7/8/10 11/12/13/14/15/16/17 18/19/21/23/25/27/28/ 30/36	
193		Diode 1 N 4148 (5x)	8309-215-045	D 39/40/41/52/53	
194		IC HEF 4021 BP	8305-005-021	IC 3	
195		IC HEF 4532 BP	8305-005-532	IC 2	
196		IC 74 HC 74 N	8305-180-074	IC 7	
197		IC 74 HC 4094 N	8305-181-094	IC 1	
198		IC UAA 2022 (3x)	8305-202-242	IC 4/5/6	

PCB MCP 50 System control

40214-770.00

199		Male multipoint connector 64-pole (2x)	41623-030.97		
200		Plug pin CKV 34-pole	41956-101.34		
201		LI battery 3V 0.5AH	8154-005-064		

Pos. Code No.	Bild Pic. No.	Benennung/Bemerkungen	Bestell-Nr. Part-Number	Description/Remark	Preis p. Stück Price p. item DM
202		Plug pin (5x)	29301-413.14		
203		Broadband choke 4312 020 36641	8140-530-066	L 1	
204		Quartz resonator 32.768 KHZ/12PF	8382-200-797	Q 1	
205		TR.P 7.5 A/D 4.5-20PF	8699-075-045	C 107	
206		Setting knob PPK10 1 KΩ LIN FN	8790-247-135	R 102 A	
207		IC SRAM 32KX8LOW P. 150NS (2x)	8305-276-356	IC 205/209	
208		IC SRAM 8KX8 LOW POWER (2x)	8305-004-265	IC 203/210	
209		Diode BAT 46 WW.BAT 85/BAT 86 (2x)	8309-198-046	D 100/101	
210		IC PCF 8583	8305-108-583	IC 120	
211		IC 74 HC 02 N (2x)	8305-180-002	IC 102/103	
212		IC 74 HC 04 N	8305-180-004	IC 201	
213		IC 74 HC 08 N (2x)	8305-180-008	IC 101/119	
214		IC 74 HC 10 N	8305-180-010	IC 206	
215		IC 74 HC 74 N (2x)	8305-180-074	IC 105/106	
216		IC 74 HN 161 N (3x)	8305-180-161	IC 114/115/116	
217		IC 74 HC 166 N (2x)	8305-180-166	IC 207/211	
218		IC 74 HC 245 N (2x)	8305-180-245	IC 108/110	
219		IC 74 HC 574 N (6x)	8305-180-574	IC 107/109/112/113 117/118	
220		IC 74 HC 652 N (2x)	8305-180-652	IC 202/208	
221		IC 74 HC 4017 N	8305-181-017	IC 104	
222		IC 74 HC 4040 N	8305-181-040	IC 111	

Pos. Code No.	Bild Pic. No.	Benennung/Bemerkungen	Bestell-Nr. Part-Number	Description/Remark	Preis p. Stück Price p. item DM
		PCB MCP 50 YUV Memory 40214-780.00			
223		Broadband choke 4312 020 36641	8140-530-066	L 1	
224		SRAM 64KX4 35 NS (7x)	8305-004-364	IC 107/108/109/111/ 112/113/114	
225		IC SRAM 8KX8	8305-004-265	IC 203	
226		IC GAL 20V8-25 LP (2x)	8305-555-208	IC 303/305	
227		Male multipoint connector 64-pole (2x)	41623-030.97		
228		IC holder DILB 24 SP8 IL (2x)	41956-202.24	IC 303/305	
229		PCB connector 14-pole (3x)	44207-039.97		
230		Multipole connector 60-pole	44207-101.97		
231		IC 74 HC 00 N	8305-180-000	IC 309	
232		IC 74 HC 02 N	8305-180-002	IC 201	
233		IC 74 HC 04 N	8305-180-004	IC 102	
234		IC 74 HC 32 N	8305-180-032	IC 307	
235		IC 74 HC 74 N	8305-180-074	IC 308	
236		IC 74 HC 86 N	8305-180-086	IC 202	
237		IC 74 HC 139 N	8305-180-139	IC 101	
238		IC 74 HC 174 N (3x)	8305-180-174	IC 301/302/304	
239		IC 74 HC 573 N (2x)	8305-180-573	IC 205/206	
240		IC 74 HC 574 N	8305-180-574	IC 306	
241		IC 74 HC 652 N (5x)	8305-180-652	IC 103/104/105/106 204	
242		IC 74 HC 4050 N	8305-181-050	IC 310	

Pos. Code No.	Bild Pic. No.	Benennung/Bemerkungen	Bestell-Nr. Part-Number	Description/Remark	Preis p. Stück Price p. item DM

PCB MCS 50 Power supply

40214-790.00

243	Male-multipole connector 64- pole	41623-030.97		
244	Clamp (5x)	43240-065.00		
245	Fuse holder (2x)	09626-739.00		
246	Mica washer (5x)	29701-629.01		
247	Plug pin (7x)	29301-413.14		
248	Filter choke (2x)	09290-826.04	L 1/2	
249	Filter choke (2x)	09290-826.05	L 4/6	
250	IC PST 520 C	8305-558-520	IC 2	
251	IC L 4960 (2x)	8305-204-960	IC 3/4	
252	IC MC 7905 CT	8305-205-905	IC 7	
253	Trans.BUZ 10	8302-269-010	T 1	
254	THYR. 2N 6505	8309-503-655	TY 1	
255	Diode BYS 26 SB345S (3x)	8309-518-026	D 5/6/7	
256	Diode USD 945	8309-550-945	D 4	
257	Storage choke (160UH 2.5 A)	41956-226.00	L 3	
258	Storage choke (250UH 3.15A)	41956-227.00	L 5	
259	Storage choke (63UH 6.3A)	41956-228.00	L 7	
260	DW-MET.Band 0.015 Ω 5% 4W AX 350-8	8750-995-004	R 18	
261	FS. 4 A/T	8315-623-003	SI 1	
262	Diode 1 N 4148 (5x)	8309-215-045	D 2/8/9/10/11	
263	Z Diode BZX 85 C6 V2	8309-701-508	D 1	

Pos. Code No.	Bild Pic. No.	Benennung/Bemerkungen	Bestell-Nr. Part-Number	Description/Remark	Preis p. Stück Price p. item DM
264		Z Diode BZX 85 C 15	8309-701-515	D 3	
265		Trans.BC 546 B (4x)	8303-241-546	T 2/3/5/6	
266		Trans. BC 556 B	8303-241-556	T 4	
267		IC LM 339 N	8305-204-339	IC 6	
268		IC UC 3526 /LT 3526/ SG 3526	8305-267-526	IC 1	
269		IC LM 78 L 05 ACZ	8305-204-805	IC 5	
		PCB MCS 51 Transformer board 40214-800.00			
270		Mains pushbutton	40209-032.00	S 1	
271		Socket	40209-071.00		
272		Receptacle	40213-022.00		
273		Europlug No. 1, 20.110-82 (2x)	8132-001-002		
274		Transformer BV.No.13154-P2S01K	41956-002.00	TR 1	
275		Boardband choke 4312 020 36641 (2x)	8140-530-066	L1/2	
276		FS.630 MA/T	8315-615-003	SI 1	
		PCB MCS 51 Pulse output stage 40214-850.00			
277		Male multipole connector 64-pole	41623-030.97		
278		BNC-HF-socket 75 Ω (8x)	09622-499.00		
279		Earthing strip (2x)	09622-472.00		
280		Insulating ring (8x)	09622-491.00		
281		Holder C42121-A40-C14 (4x)	8290-005-132	C 114/115/124/125	

Pos. Code No.	Bild Pic. No.	Benennung/Bemerkungen	Bestell-Nr. Part-Number	Description/Remark	Preis p. Stück Price p. item DM
282		Broadband choke (3x) No. 4312 020	8140-530-066	L 1/2/4	
283		Quartz resonator 32.768 KHZ / 12PF	8382-200-797	Q 100	
284		Setting knob 2.2 KΩ LIN FN (2x)	8790-247-140	R 110/130	
285		DR AX 0411-GA 33UH 10% (16x)	8140-526-530	L 310/311/320/321/330/ 331/340/341/350/351/ 360/361/370/371/380/ 381	
286		IC 74 HCU 04	8305-183-004	IC 100	
287		IC 74 HC 86 N (4x)	8305-180-086	IC 110/130/201/202	
288		IC 74 HC 4040N	8305-181-040	IC 101	
289		IC HEF 4051 BP (2x)	8305-005 051	IC 111/131	
290		IC 74 HC 4094 N (2x)	8305-181-094	IC 200/203	
291		IC TL 072 A CP	8305-440-072	IC 102	
292		IC LM 6361 N (6x)	8305-204-661	IC 310/320/330/340 350/360	

Professional Video Generator VG 1100

FUNCTIONAL DESCRIPTION

GRUNDIG
electronic

Functional description VG 1100

1. General

The VG 1100 is essentially based on two processor systems. Almost all the data required for a test pattern are calculated, saved in RAMs and then repeatedly read out. The parameters selected by the user such as amplitude variation of the output signal, polarity of the clock signal etc. are also controlled by software.

This means a high degree of flexibility as regards possible expansions such as additional test patterns and as regards user operation.

2. Memory concept and test pattern generation

When the user operates a key (control board), this module activates the IRQ-01 circuit. The operator processor (µP module) then sets off a keyboard interrogation. The relevant data arrives at the operator processor over the PE 1 circuit and from here they are relayed to the video processor over the RXD circuit. The video processor acknowledges successful data transfer with the handshake circuit.

The video processor calculates the data required for picture generation and transfers them over bus DB0...7 to the sequence control unit (text and circle memory) and the YUV memory module (Video RAM and components RAMs). The video processor addresses the memory ICs during the write operation and transfers signals A0...11 to the address connections of the RAMs via the latches IC 112, IC 113, IC 107 and IC 109. Once the write operation is complete, there is a switch to a read operation. Addressing no longer takes place via the video processor but is generated by counters in the sequence control unit. Line counter IC 111 addresses the video RAM (IC 203), the outputs of which control the lower-value address bits of the component RAMs, i.e. the video RAM determines which line is read from component RAM. Pixel counter IC 114, IC 116 addresses the higher-value address inputs of the component RAMs. Information about one line is located on the component RAMs. If a test pattern containing a circle or text is selected, the data saved with IC 209, IC 210 (sequence control unit) is added to the data read out from the component RAMs. This data arrives at the DA converter IC 701, IC 801 and IC 608 (video module) where it is converted to analog voltages. The multiburst and the color signal are both generated by separate modules (MCO 50 multiburst module, PAL MCC 51 color module). The amplitudes of the CVBS, chroma and multiburst signals can be adjusted separately via the multipliers IC 100, IC 301 and IC 200. The adders IC 300, IC 305 and IC 405 combine the individual components and the standard video signals are available over the output amplifiers IC 314, IC 307, IC 306 and IC 405.

3. Synchronization

3.1 Internal

There is a temperature-controlled voltage-controlled quartz oscillator (TCVXO) T301, T 302 on the PAL color module with the fourfold color subcarrier frequency. All time-relevant signals are derived from here. The oscillation generated and divided by 4 is compared to the H/4 pulse (T 106, IC 102). The tuning voltage generated readjusts the 4.5 MHz oscillator T 201, T 202 (clock generator module). This clock signal is compared with the H pulse in the further phase comparison IC 218 and the control voltage generated readjusts the 4 MHz oscillator T 204. This oscillator clocks IC 211 (built-in TV clock generator). The pixel clock of 13.5 MHz is generated in the further PLL (Phase Locked Loop) IC 219, T 203.

3.2 GenLock operation

In this operating mode, all the time-relevant clock signals are synchronized by an externally supplied video signal. The sync separator IC 201 supplies the synchronous part of the reference signal. The H-SYNC signal executes the line cross coupling, the V SYNC signal the video cross coupling; PR carries out the sequence of 8 and the f_{FT} sync signal connects the color subcarrier oscillator, phase and frequency-locked, to the reference signal.

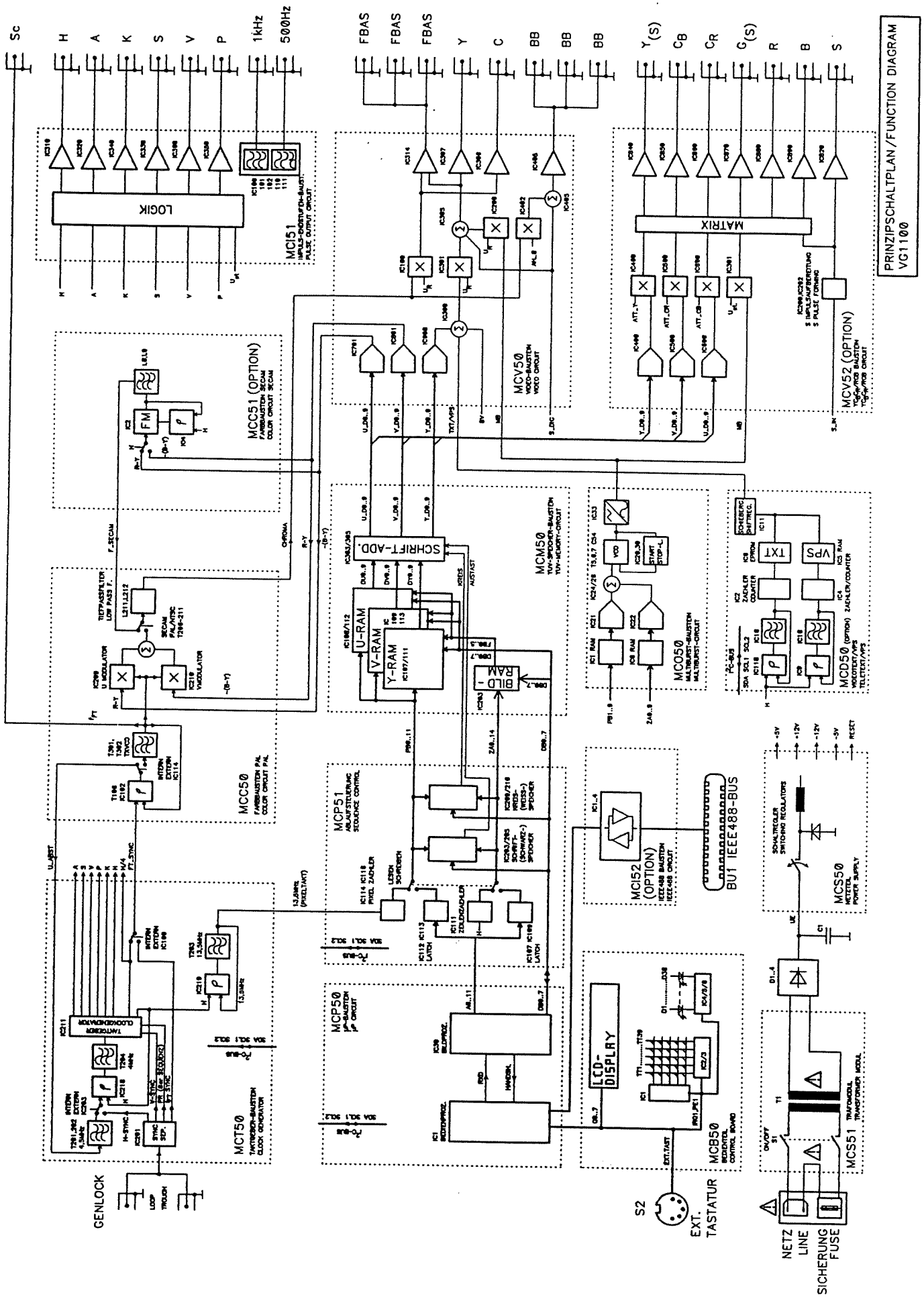
PRINZIPSCHALTPLAN / FUNCTION DIAGRAM
VG1100
Sc
H
A
K
S
V
P
1kHz
500Hz
FBAS
FBAS
FBAS
Y
C
BB
BB
BB
Y(S)
CB
CR
G(S)
R
B
S
LOGIK
MCI51
MATRIX
MCV50
MCV52 (OPTION)
MCC51 (OPTION)
MCC50
MCM50
MCO50
MCD50 (OPTION)
MCT50
MCP51
MCP50
MCI52 (OPTION)
MCB50
MCS50
MCS51
SCHRIFT-ADD.
U-RAM
V-RAM
Y-RAM
BILD-RAM
LCD-DISPLAY
BU1 IEEE488-BUS
GENLOCK
S2
EXT. TASTATUR
NETZ
LINE
SICHERUNG
FUSE

Functional description MCS 50 switched-mode power supply

1. Voltage +5 V

The +5 V are generated in a step-down transformer (buck converter). Energy is transferred to the output during the conducting phase of transistor T 1. At the same time energy is stored in coil L 7 by a linear rising current. This energy is transferred to the load via diode D4 during the locking phase of T 1.

The output voltage is supplied to IC 1 pin 2 over R 12 A, R 12 B. The reference voltage generated in IC 1 (pin 18, +5 V) is divided between resistors R 12, R 14 and is present at pin 1. These two voltages are compared by a comparator which controls a pulse width modulator using an error amplifier. The output of the pulse width modulator (IC 1, pin 17) controls switching transistor T 1 via transistors T5, 6 and 3. T 2, D 2, D 3, C 5, R 4, R 5 and R 6 generate a voltage of ca. 40 V as the result of a capacitive voltage doubling on collector T 3.

C 11 and C 13 determine the frequency of the internal oscillator. C 12, C 14 and R 15 correct the frequency response of the error amplifier. Soft-start capacitor C 14 determines the time required by the output voltage to reach its nominal value (+5 V) after switch-on. R 18 serves as a shunt. If a voltage of greater than 100 mV_{pp} falls off here, the output current is restricted by depressing the output voltage.

2. Voltage -5 V

An auxiliary winding on L 7 taps negative voltage, rectifies it via D 5 and stabilizes it at -5 V via IC 7 (7905).

3. Voltage +12 V

The +12 V converter operates on the same principle as the +5 V generation (step-down transformer). In this case, however, the switching transistor is built into IC 4, L 4960. The output voltage is divided between R 27 and R 28; C 45 acts as the soft-start capacitor; C 42, R 25 determine the frequency of the built-in oscillator and C 43, C 44 and R 26 act as frequency response compensation for the error amplifier.

4. Voltage -12 V

The -12 VD are generated by a flyback converter. Current flows into coil L 3 during the conducting phase of the switching transistor (IC 3, pin 1, pin 7).

During the locking phase, the energy saved in coil L 3 is transferred to the output via the currently conducting diode D 6.The output voltage arrives at pin 2, IC 3. This voltage is compared with an internally generated reference voltage. The output signal of this comparator runs through an error amplifier and then controls the pulse width modulator the output of which in turn controls the built-in transistor. C 28, R 21 determine the frequency of the oscillator (ca. 100 kHz). C 29, C 30 and R 22 determine the frequency response of the error amplifier. The soft-start capacitor C 31 determines the time required by the output voltage to reach its nominal value (-12 V) after switch-on.

5. Reset

Only with devices up to pcb index 04. From index 04 the Reset module is located on the µP module. At switch-on and in the case of voltage dips on the +5 V, IC 2 (PST 520) uses R 19 and C 58 to generate a reset pulse with a duration of ca. 300 ms for the microprocessors.

6. Overvoltage monitoring

Output voltages +5 V, +12 V and -12 V are divided between resistors R 41, R 38, R 40, R 39, R 32, R 30 and then compared with a reference voltage (IC 5, +5 V) at the comparator (IC 6). If an output voltage exceeds a particular value (see table), the relevant comparator output changes from 0 V to ca. +25 V (= input voltage). Transistor T 6, BC 546 B starts to conduct and fires thyristor TY 1, TYN 663, which causes fuse S1 to blow.

E_{out}	Tripping voltage
+5 V	+6.3 V
+12 V	+13.9 V
– 12 V	– 14.5 V

The +12 V is compared with the reference voltage (+5 V) in a further comparator (IC 6, LM 336 pins 10, 11, 13). If the +12 V falls to 7.8 V, this comparator output changes to 0 V and the ±5 V generation over IC 1 pin 8 is switched off. In this way a Reset is also triggered in the event of voltage dips in the +12 V at the processor.

GRUNDIG electronic

VG 1100

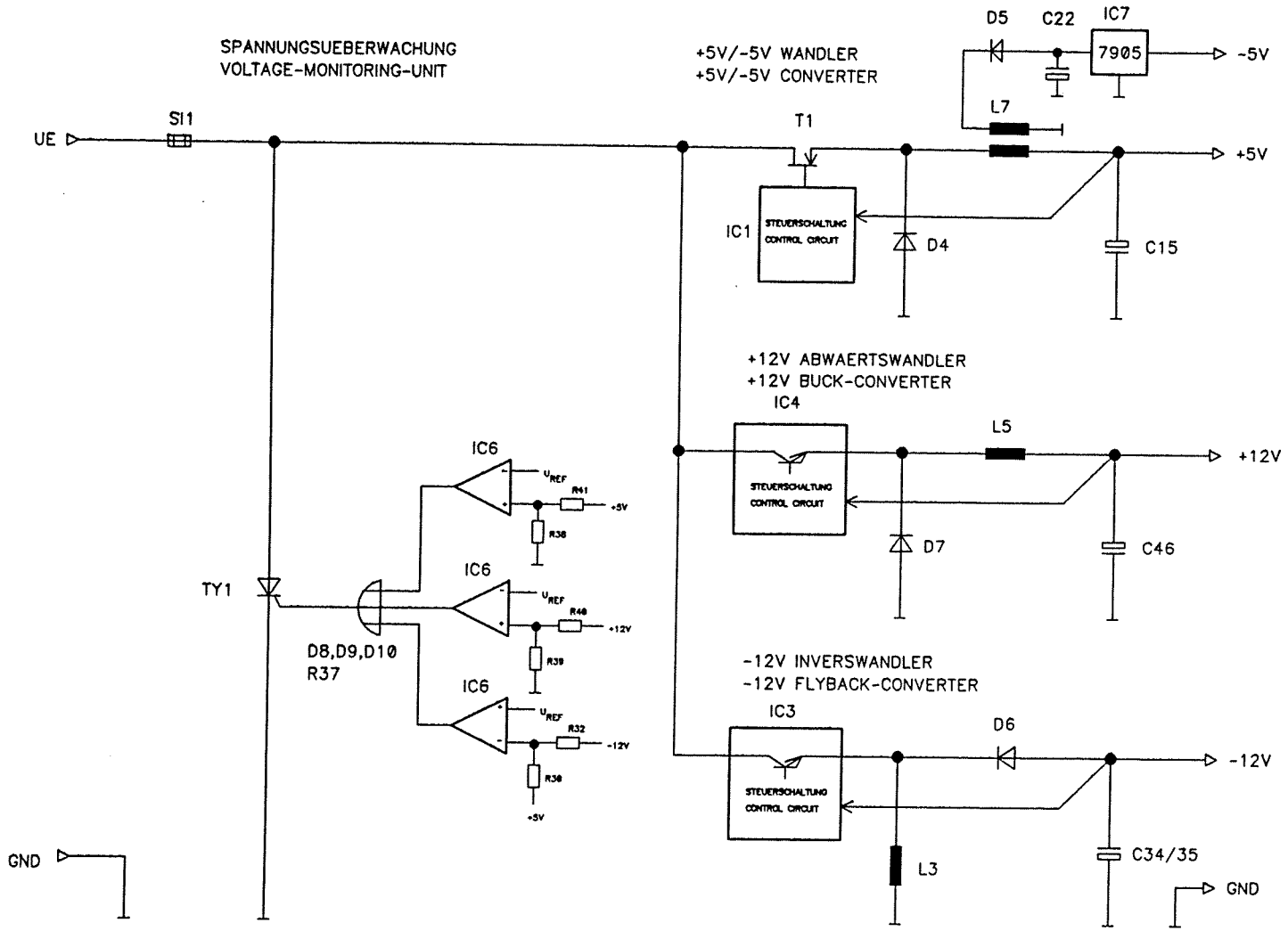

PRINZIPSCHALTPLAN /FUNCTION DIAGRAM
MCS50 NETZTEIL
MCS50 POWER SUPPLY

Functional description MCB 50 control board

1. General

1.1 Keyboard scanning

1.2 LED control

1.3 Rotary switch

1.4 Ext. keyboard

1.5 LCD

1. General

If a key is pressed or the rotary switch operated, the control board transmits a signal to the µP module. If an external keyboard is present (not included in the basic unit), it also sends its signal to the µP module.

Important information which cannot be displayed by the LEDs, such as configuration of the VPS label, pulse form of the clock signals etc. appears on the LCD.

1.1 Keyboard scanning

The keys are arranged in a matrix. In the idle state H level is present at the line circuits and L level at the column circuits. When a key is operated, H level arrives at the relevant input of the IC 2 encoder, HEF 4532 B. The "E OUT" output, pin 15 of this IC switches to L (idle state = H). This pulse is differentiated through C 10, 10 NF and a keyboard scanning is set off in the processor module by the IRQ 1 circuit. Shift register IC 1, 74 HC 4094 is written to using the "CLK" and "Data" circuits. A positive pulse to IC 1, 74 HC 4094 (LE__TAS signal) causes the shift register to transfer the data to the output. In this way the lines are applied to H level one after the other. When a key is depressed, the relevant column circuit is also applied to H level. Priority encoder IC 2, HEF 4532 converts the input signal to binary form (pins 6, 7, 9). This bit pattern is simultaneously written to shift register IC 3, HEF 4021 and is read out serially with the "LE__TSR" (H active) signal. The serial bit pattern to IC 3, pin 3 (circuit PE 1) contains the information as to which key has been pressed.

1.2 LED control

When the operator processor detects a depressed key, it sends data over the "Data" circuit to shift registers IC 4, 5 and 6. These ICs are clocked over the "CLK" circuit. A positive pulse on the "VDR" circuit causes the shift registers IC 4, 5 and 6 to transfer their information to the output. Soldering strap BR 10 can be closed for test purposes. All LEDs must then light up.

1.3 Rotary switch

Operating the rotary switch causes positive pulses to arrive at the CLK input of D flip-flop IC 7, pin 11. These pulses appear at the output of this IC (pin 9) and arrive at the priority encoder IC 2, pin 4. IC 2 converts the input data to binary signals and writes these to shift register IC 3, from where they are then read out serially over the "PE 1" circuit. Priority encoder IC 2 outputs pulses to pin 15 as a result of its input signals and these reset flip-flop IC 7 via R3. C 9 effects a defined time constant of this reset pulse. The direction of rotation is detected by IC 7, pin 2, pin 3 and pin 6. If the rotary switch is operated in a clockwise direction, the momentary-contact switch pin 2 , pin 4 first switches. Flip-flop IC 7 takes over its positive input level (pin 2) at the pin 5 output. If it is operated in an anticlockwise direction, momentary-switch pin 1, pin 2 first switches. Flip-flop IC 7 now has L level at its input (pin 2). The input level is transferred to the output by clocking (pin 3). The information thus obtained is converted to a serial data flow with shift register IC 3.4 and is transmitted to the operator processor module.

1.4 Ext. keyboard

An external ASCII keyboard can be connected on socket S 2. A keyboard with a 1200 baud transmission rate, TTL level and serial data transfer must be used (Cherry V80-1700 HAD). The data are transferred to the operator processor over the "EXT-TAST" circuit.

1.5 LCD

The operator processor transmits data to the LCD over circuits Q__0...Q__7. The address and control circuits AO, R__W and CS__LCD address the display (the contrast of the LCD can be adjusted on the operator processor module using the actuator R 1).

GRUNDIG electronic

VG 1100

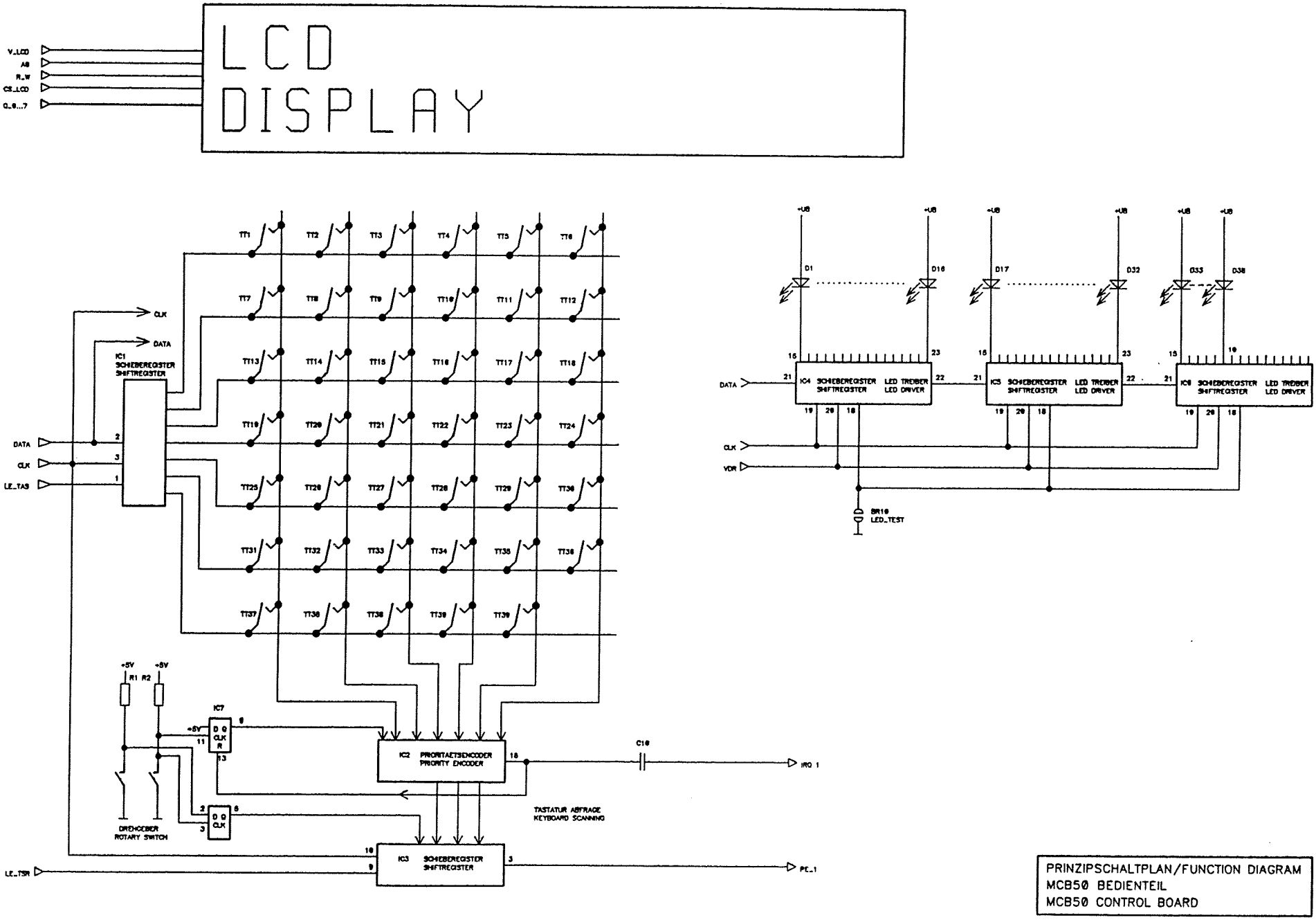

PRINZIPSCHALTPLAN/FUNCTION DIAGRAM
MCB50 BEDIENTEIL
MCB50 CONTROL BOARD

Functional description
MCI 51 pulse output-stage module

1. Video signals

This module supplies the requisite television clock signals such as the H, A, S, K, P and V pulses. By resoldering jumper BR 200, the AH pulse can be switched to this output in place of the H pulse. In a similar way, the P pulse can be substituted by the H/2 pulse by resoldering jumper BR 201. 2 reserve outputs can be created by retrofitting integrated circuits IC 370 and IC 380 (LM 6361). Reserve output 1 supplies the V 25 pulse and if resoldered the V 8 pulse. Reserve output 1 is switched to the frame pulse by closing jumper BR 203 (BR 202 must be open on both sides in this case). Reserve output 2 can be switched to all existing pulses. To do this, a wire must be soldered from the "JMP" connector to the appropriate connector "H", "A" .... "H/4". The appropriate output must be wired to the BNC socket instead of the AF socket.

Output	Alternative	Strap to be resoldered
H	AH	BR 200
A	-	-
S	-	-
K	-	-
P	H/2	BR 201
V	-	-
Reserve 1	V 25/V 8/Frame	BR 202/BR 203
Reserve 2	H, A, S, K, P, V, AH, H/2, V 25, V 8, H/4	Jumper

The output voltage is 2 V_{pp} of 75 Ω. The pulse form can be selected from 4 pulse models.

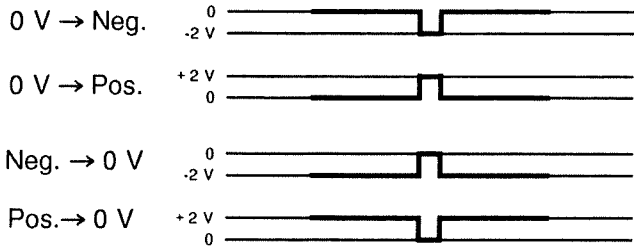

The mode of operation of the circuit is described with reference to the H signal. All other signals function according to the same principle.

a) Pulse form 0V → Neg.

The L active H pulse is always present at IC 201, pin 1 irrespective of the selected pulse form. The H pulse is inverted by the H level at IC 201, pin 2.

The low-pass filter L 310, C 310 ... C 314 ensures a defined rise and fall time of 100 ns for the pulse edges. The operation amplifier IC 301, LM 6361 is switched as an inverted amplifier (plus input to ground). The resistance combination R 314, R 311 effects a negative H pulse of 2 V_{pp} at the H output (BNC socket).

b) Pulse form 0V → Pos.

The two shift registers IC 200 and IC 203 are written to via the data and clock circuits. A positive pulse on the LE output-stage circuit causes the data to be transmitted to the shift register outputs. In this operating mode L level is present at IC 201, pin 2. The XOR does not invert the signal. H level is present at the resistor combiation R 312, R 131. R 311 and R 314 determine the amplification of the inverted amplifier. A DC voltage of +2 V is present at IC 301, pin 2 (+ input of the OP) via resistors R 312 and R 313. It causes a DC voltage shift of the output signal so that the H pulse appears H-active at the BNC socket from 0 V → 2 V.

c) Pulse form Neg → 0 V

If this mode is selected L level is present at IC 201, pin 2 and IC 301, pin 2 as a result of the two shift registers IC 200 and IC 203. Op amplifier IC 301 inverts the signal causing the H pulse of -2 V → 0 V to be applied to the BNC socket.

d) Pulse form Pos → 0 V

H level is present at IC 201, pin 2. The XOR inverts the H pulse. IC 301 inverts the pulse again and subtracts it from the +2 V applied to pin 2. In this way the H pulse of +2 V → 0 V is applied to the BNC socket.

2. AF signals

2 AF signals are available at 2 other BNC sockets (500 Hz, 0.5 V_{eff} at 600 Ω and 1 kHz, 0.5 V_{eff} at 600 Ω). Both signals are generated according to the same principle, the method of operation is explained with reference to the 1 kHz generation. Integrated circuit IC 100, 74 HCU 04 (pin 1, 2, 3, 4, 5 and 6 operates as a quartz oscillator with a frequency of 32.7684 kHz. This signal is transmitted to IC 101, 74 HC 4040 B as a clock. Outputs Q2, Q3 and Q4 control IC 110, 74 HC 86, IC 111, HEF 4051 B over the XOR gates. This 1 of 8 circuits (IC 111) taps the voltages at pins 13, 14, 15,12, 1, 5, 2 and 4 one after the other and applies these to the output (pin 3) of the IC.

When the counter module IC 101, 74 HC 4040 B reaches the ninth clock cycle, Q5 switches to H. The exclusive OR gates thus function as inverters. The phase-turned counter outputs (Q2, Q3 and Q4) now cause the 1 of 8 switch to scan the generated voltages in the reverse sequence. The approximated sinus signal on IC 111, pin 3 is freed from existing interference residues via the active low-pass filter IC 102, R 121 ... R 124, C 114 ... C 117. The amplitude can be adjusted using R 110.

PRINZIPSCHALTPLAN /FUNCTION DIAGRAM
MCI51 IMPULS-ENDSTUFEN-BAUSTEIN
MCI51 PULSE OUTPUT CIRCUIT

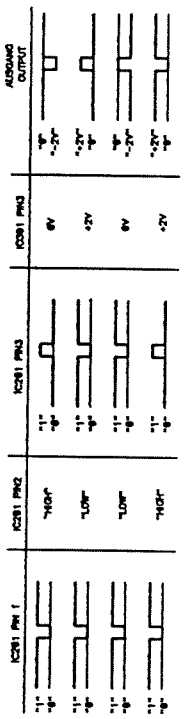

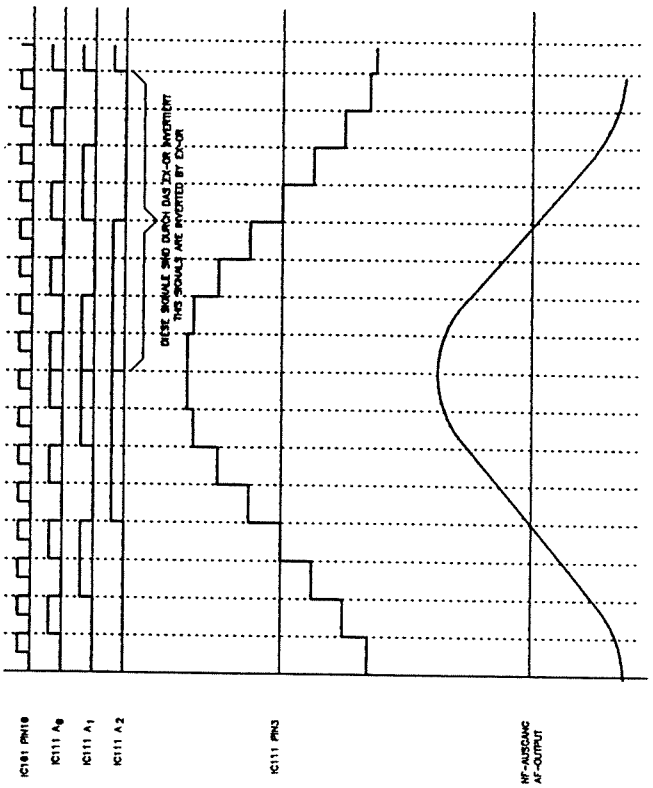

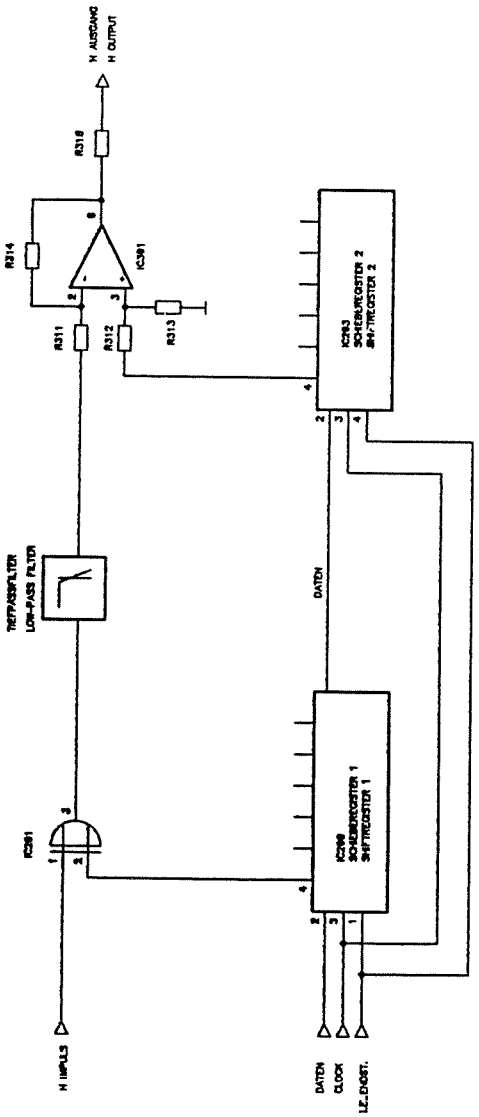

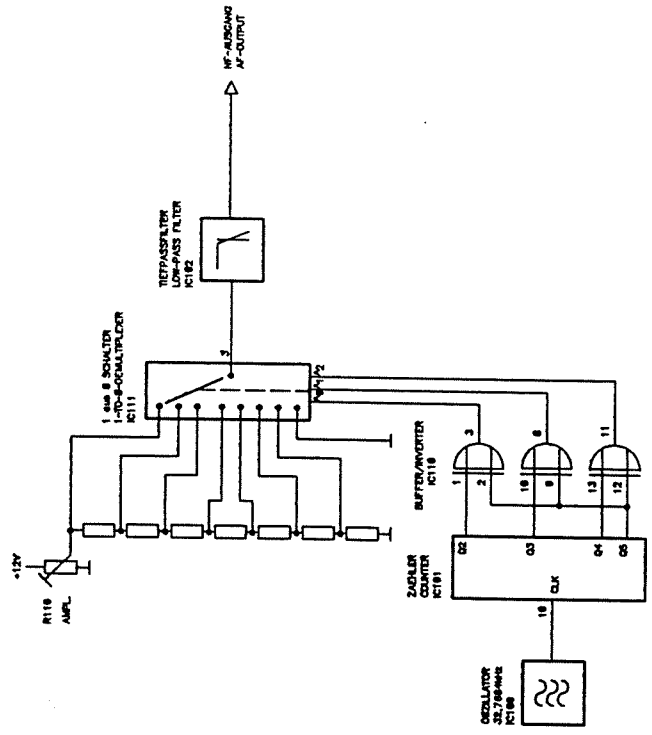

Functional description
MCP 50 Sequence control

1. General
2. Pixel counter
2.1 Write operation
2.2 Read operation
3. Line counter
3.1 Write operation
3.2 Read operation
4. Clock
5. Decoder for blanking
6. Decoder for FB-LE signal
7. Text, clock and circle fade-in
8. Background fade-in

1. General

The sequence control provides the address signals for the memory module. When the RAMs are being written to, the address signals coming from the µP module are relayed to the memory module. When they are being read, they are generated by the sequence control. Where test patterns contain text, time or a circle, the requisite data is stored in the sequence control. There is also a battery-operated clock IC on the sequence control.

2. Pixel counter

2.1 Write operation

The pixel counter addresses the memory ICs which contain the information about a line. The µP module applies the address signals to the latches IC 112 and IC 113 when writing to the memory module. Here they are switched to the output of these ICs with the "Latch pixel pulse". At the same time L level is present at the "ASYNC" circuit. In this way reset input IC 104, pin 15 is also applied to L via IC 101, pin 4, 5 and 6. IC 104 counts continually. The parallel load pulses for the counters IC 114, IC 115 and IC 116 are present at the output of flip-flop IC 102, pin 1. The counter ICs relay the input statuses (pin 3, 4, 5 and 6) to the outputs. The address signals arrive at the memory module (PB__0 ... 11) over the latches IC 117 and IC 118. The 13.5 MHz pulse clocks the ICs 117, 118 (pin 11).

2.2 Read operation

The memory module is read during the visible line duration. One byte of the memory module is rewritten during the H pulse (refreshed).

H level is present at the "ASYNC" circuit. The (L active) H pulse is switched through via IC 101, pin 4, 5 and 6 and counter IC 104 begins to count. An address (as described in 2.1) is switched through to the memory module over the integrated circuits IC 112, IC 113, IC 114, IC 115, IC 116, IC 117 and IC 118. In this way a byte of the memory module is rewritten. After the tenth clock cycle counter IC 104 is stopped as the result of the restoring of IC 104, pin 11 to IC 101, pin 1. A further writing of the memory module cannot take place here. Counter output IC 104, pin 11 resets the flip-flop created by IC 103, pins 1 to 6. This causes the counters IC 114-116 to begin counting. The output statuses of these counters are relayed to the memory module over latches IC 117 and IC 118 where they are used as addresses for the read cycle.

3. Line counter

3.1 Write operation

The address signals coming from the µP module arrive at the inputs of latches IC 107 and IC 109. The control circuit "Latchline" switches the address signals through to the memory module.

3.2 Read operation

The requisite address signals are generated by line counter IC 111 when reading the memory module. The V pulse, which together with flip-flop IC 106, pin 9, creates a needle pulse, resets the counter during the V gap. The counter obtains the line-frequent clock signal from IC 104, pin 7. Bus driver IC 108 and IC 110 switch the data onto the address bus as the result of a control pulse at pin 19.

4. Clock

The clock IC (IC 120) is located on the sequence control. This circuit corresponds with the operator processor over the circuits "SCL__1" and "SDA__1". C trimmer C 107 can be used to adjust the pulse length of 1 s at MP 3.

5. Decoder for blanking signal

Circuits IC 201 (pin 3-6), IC 206 (pin 3-11) and IC 103 (pin 8-10) connect their input signals so that a blanking pulse is generated at the output. This signal blacks out the image content over the text addition.

6. Decoder for FB__LE signal

Flip-flops IC 105 supply the FB__LE signal which activates latch IC 206 on the memory module to buffer the frame bus.

7. Text, clock and circle fade-in (white memory)

If text, the time or a circle is to be faded into a test pattern, the µP module computes the requisite data and stores them in the bi-directional bus driver IC 208. The control circuit "LE__write" is activated for this purpose.

With the help of control circuit "WE__SCH", the data is stored in RAMs IC 209, IC 210, which are addressed by the pixel and line counter. The µP module can also read the RAMs with the help of control circuits "CP__read" and "OE__SCH". Gate IC 206, pin 1, 2, 12 and 13 connects the address signals "PB__0...2" so that the shift register is loaded after every eight pulses (pin 15). The 13.5 MHz oscillation clocks the shift register (pin 6) and the data are available serially at output pin 13.

8. Background fade-in (black memory)

When text or the time is faded in, the background can be switched to dark. This happens in the same way as the text, clock and circle fade-in (item 7) over ICs 202, 203, 205 and 207.

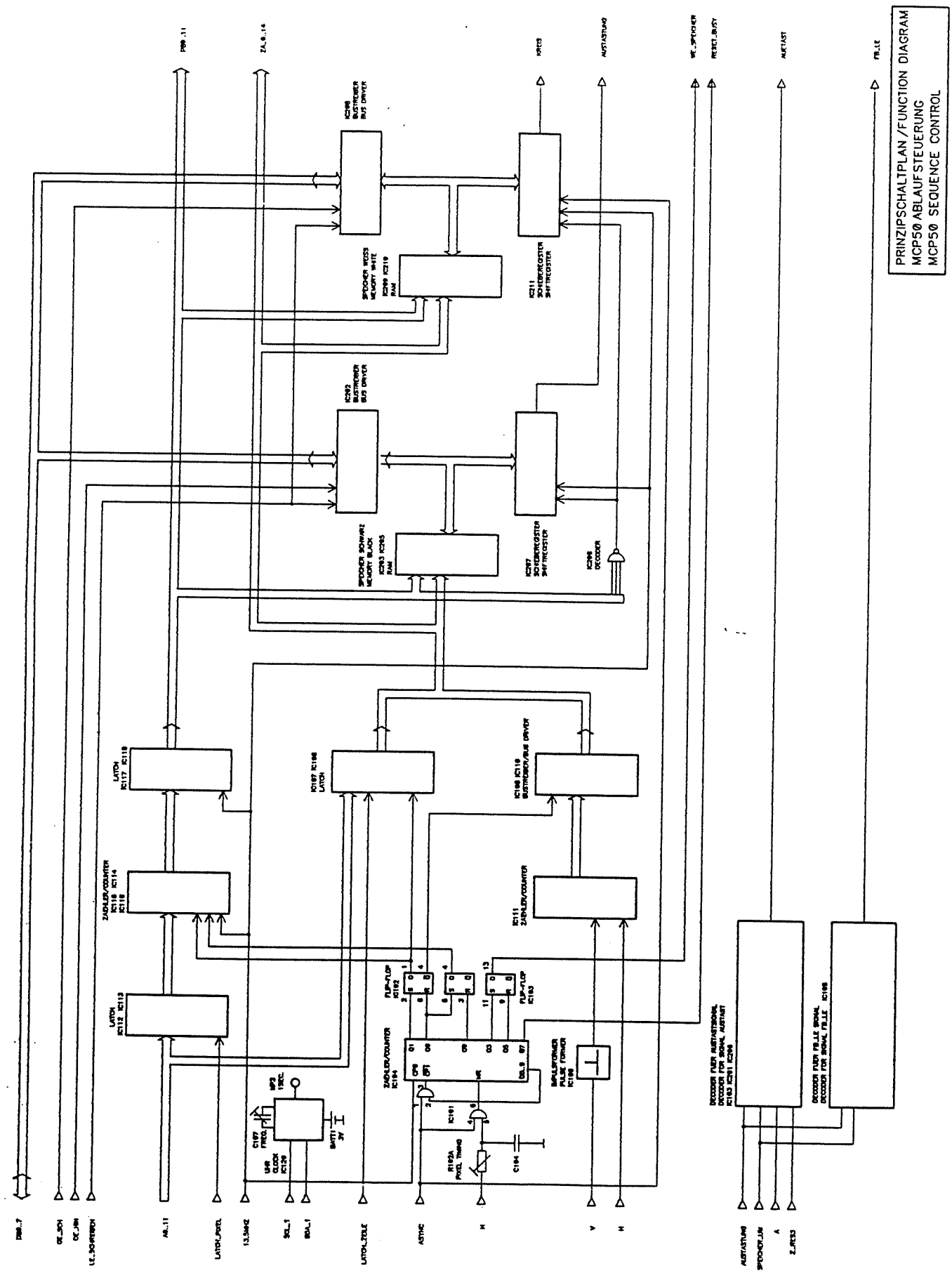
PRINZIPSCHALTPLAN /FUNCTION DIAGRAM
MCP50 ABLAUFSTEUERUNG
MCP50 SEQUENCE CONTROL

Functional description MCP 51 µP module

This module comprises 2 processor units, the operator processor and the video processor. The operator processor has the following functions:

- Keyboard scanning
- Receiving data from an external keyboard, if connected
- Receiving data from the IEEE 488 module (option)
- Controlling the LCD
- Transfer of data to other modules over shift registers and 12C bus
- Transfer of data to the video processor

The video processor computes the picture components on the basis of the data received over the RXD circuit and relays them to the YUV memory module or the sequence control. When the unit is switched on a reset pulse (from the switched-mode power supply) arrives at plug 740, pin 14 A. The signal is applied to IC 1, pin 39 over the IC 12, pin 9, 10, 8 which is switched as a Schmitt trigger. From pcb index 04 onwards the switch-on reset is generated on the uP module. There is an additional reset button on the control board whose signal arrives at IC 1, pin 40 over plug S 1, pin 2. Both residue signals are L active. The processor supplies the data AD0 ... AD7 and addresses A0 ... A7 to the same bus (multiplexed). A pulse at IC 1, pin 26 switches the addresses A0 ... A7 to the output of this IC over IC 1, pin 11. Decoder IC 3, GAL 16 V 8-25 supplies the enable signals (CE signals) required to select the memory ICs.

Keyboard scanning

The IRQ__1 signal arrives at processor IC 1, pin 41 over plug 1, pin 7. If L level is present here, the processor scans the keyboard. The data coming from the keyboard arrive at IC 1, pin 18 over plug 1, pin 12 (PE 1 circuit). Refer to the functional description of the control board for a detailed description of keyboard scanning. If an external keyboard is connected to the control board, its data are present at IC 12, pin 2 over plug 1, pin 3. A circuit (PD 0) connects IC 12, pin 3 to IC 1, pin 42.

LCD

Control circuits R__W, CS__LCD and A0 address the LCD. The data are transferred to the display over IC 10, 74 HC 245. Actuator R1 can be used to adjust the contrast of the LCD.

I²C bus

Data are relayed to the sequence control (clock IC), signal generator board (TBB 200) and videotext/VPS board/TBB 200 over circuits SDA (plug 740, pin 29 B and plug 741, pin 21 A), SCL (plug 741, pin 20 B) and SCL 2 (plug 740, pin 29 A). SDA is the data circuit. SCL 1 and SCL 2 are used to clock the I²C bus.

Data transfer

The data input at the control board and processed in the video processor are transmitted serially to the other modules of the VG 1100 over the "Data" circuit (plug 740, pin 30 B and plug 741, pin 13 A).The requisite clock signal arrives at plug 740, pin 30 A and plug 741, pin 13 B over the "CLK" circuit. The "LE" circuits determine which module the transmitted data are intended for (e.g. LE__ENDST: pulse output-stage module). Relevant data are transmitted to the video processor unit over the "RXD" circuit. Acknowledgement of successful data transmission takes place via the "Handshake" circuit.

IEEE 488 (option)

If data are to be sent from the IEEE 488 module to the control board unit, the "IRQ__1" circuit switches to L for a short time. The address and control circuits A 1, A 2, CSIEC und E address the IEEE module. Circuits AD0...AD7 transfer the data.

Video processor

Processor IC 30 receives the information as to which test pattern has been selected (IC 30, Pin 42) over the "RXD" circuit. After the data has been successfully transmitted, the processor transmits a check pulse to pin 43 (handshake circuit). To do this, processor IC 30 sends a pulse to pin 26 , which is always H when the addresses are present at the bus. This pulse switches the addresses to the outputs of this IC over latch IC 31, 74 HC 573.

Decoder IC 35, GAL 16 V 8-25 transmits the CE signals for the individual memory modules. L level at the outputs of IC 35 activates the relevant IC. Once the video processor has computed the data relevant for the test pattern, it sends a pulse to pin 4. This pulse sets the RS flip-flop created by IC 13, pin 11, 12, 13, 8, 9 and 10. The RS flip-flop controls the 8 of 3 decoder IC 37 over pin 6. Outputs IC 37, 74 HC 138 select the relevant module (e.g. YUV memory card).

Control circuits RS 0 and RS 1 determine which memory IC (Y, U or V memory IC) is to be written to. IC 39 and IC 40, each 74 HC 245, address the memory ICs, the data are transmitted to the memory board over IC 41, 74 HC 245. The addresses are buffered in 2 latches on the sequence control. After the storing is complete (memory module) the RS flip-flop (IC 13, Pin 11, 12, 13, 8, 9 und 10) is reset with the signal "Reset__Busy". The processor detects whether the flip-flop is set or reset by means of the PA0 circuit i.e. when the next data transfer.may be started up. The processor can also read the information stored on the memory module. To do this an "OE" pulse (read pulse) is output via IC 38, 74 HC. The "Fast Clear" circuit can execute a fast deletion of the memory IC selected by address inputs A0, A1, A2 (IC 37, pin 1, 2, 3) over IC 12, pin 4, pin 6 and IC 37, pin 5.

GRUNDIG electronic

VG 1100

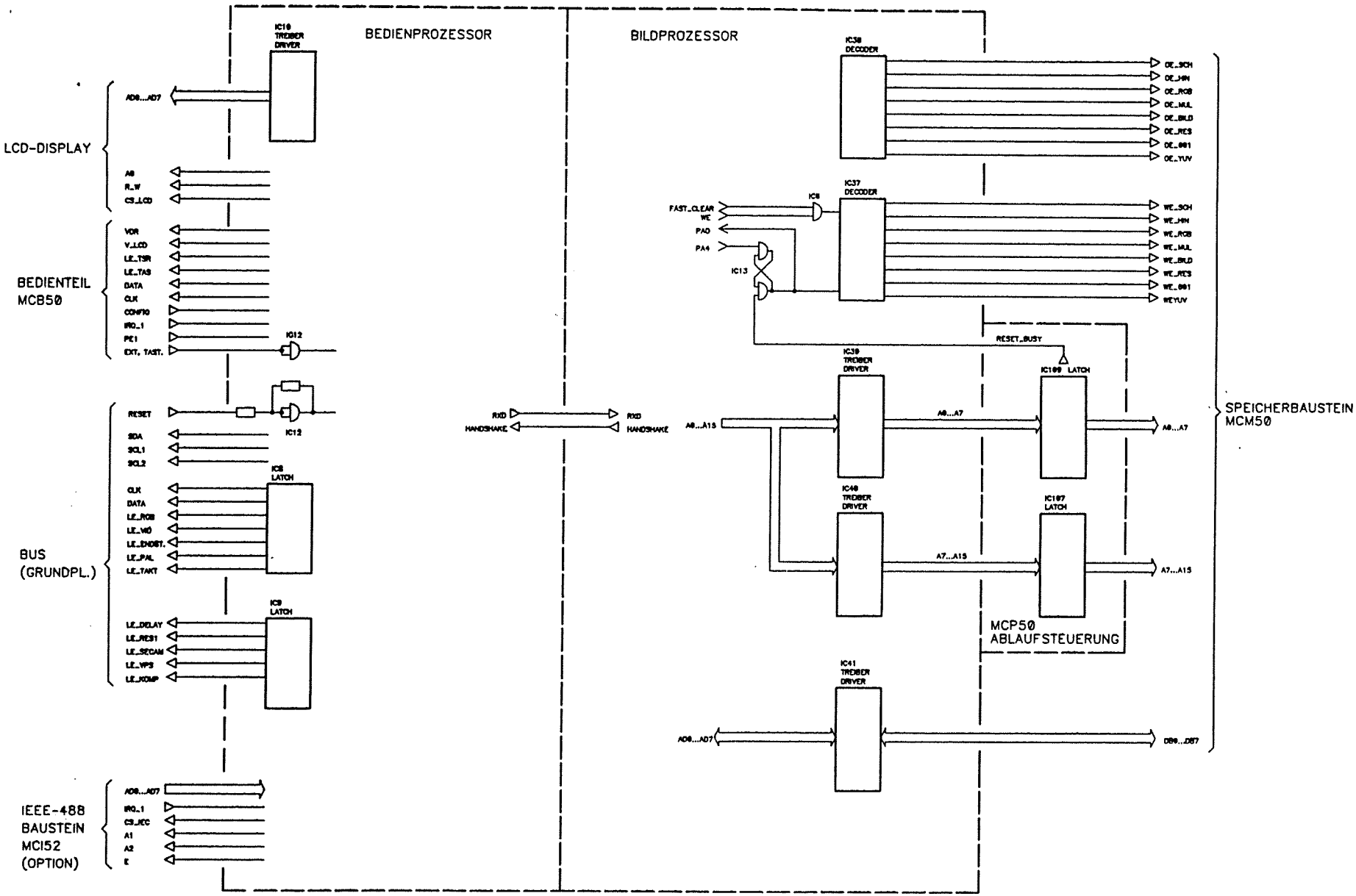

PRINZIPSCHALTPLAN /FUNCTION DIAGRAM
µP-BAUSTEIN
µP-CIRCUIT

Functional description
MCT 50 clock generator module

1. General

2. "Internal" operating mode

2.1 Pixel clock PLL

3. "External" operating mode

3.1 Disconnect synchronous pulse

3.2 Synchronization

3.3 H phase shift

3.4 Secam synchronization

1. General

The clock signal generator generates the relevant television and video signals such as A, S, V25, V, K, H/2, AH, H, P, KT, 8 V and frame. All the signals generated are synchronized to the external video signal in the "external" operating mode (GenLock operation).

2. "Internal" operating mode

There is a temperature-controlled, quartz-stable oscillator with a fourfold color subcarrier frequency 4 f_{FT} on the PAL/NTSC color module (MCC 50). This oscillator is the reference for all the video clock signals generated. The color module compares the color subcarrier oscillation f_{FT} with H/4 oscillation generated by the clock generator module and thus generates tuning voltage U_ABST. This voltage is added to a DC voltage (IC 210) coming from the reference voltage (IC 200) via R 297. The sum of these two voltages determines the frequency of oscillator T 201, T 202 and surrounding components. The mean frequency of 4.5 MHz is set via R 235. IC 203 functions as an electronic switch. Pin 5 of this IC is the control input. The switching voltage comes from IC 218, pin 6 and is at H level in the "internal" operating mode. IC 218 divides the 4.5 MHz oscillation according to the selected standard and then compares it with the delayed H pulse. The µP module can read or write data to IC 218 over circuits SDA and SCL (= I²C-Bus). The resulting tuning voltage is amplified with IC 210 and readjusts the 4 MHz oscillator T 204. The output signal of the 4 MHz oscillator clocks video clock generator IC 211; the video clock signals generated are buffered by IC 113. The pulses frame, 8 V and H/4 are decoded with the help of IC 212, IC 206 pin 5, 6 and IC 109 pins 4 to 10. In the "internal" operating mode, the H/4 pulse is switched to the "FT_SYNC" output via the electronic switch IC 100, pin 4. The two comparators IC 205 and the intermediate rectifier D 202 generate a switching voltage at the "H_Locked" output which displays whether the PLL is locked into position or not.

2.1 Pixel clock PLL

Oscillator T 203 generates the pixel clock of 13.5 MHz. IC 209 subdivides the pixel clock in accordance with the standard selected and compares it with the H/4 pulse. The resulting tuning voltage is amplified by IC 207 and readjusts the pixel clock generator.

3. "External " operating mode

Both the clock generator module and the color subcarrier oscillator (located on the color module) are synchronized by an external CVBS signal in this operating mode (GenLock operation). The requisite synchronous pulses are obtained from the external video signal, the "SY" signal takes over V synchronization and the "H_EXT" signal the H synchronization of the clock generator IC. The sequence of 8 identification takes place with the "PR" signal. The color subcarrier oscillator is synchronized by the "B_EXT" signal.

3.1 Synchronous pulse disconnection

The external video signal arrives at sync disconnection stage IC 302 over emitter follower T 100. The outputs of this IC control the electronic switches of the IC 100. The upper switch is switched through during the synchronous time, the lower during the burst time. The blanked voltages are stored using capacitors C 111 and C 152 and are available at the outputs of the voltage followers IC 101 at low resistance. The synchronous pulse is present at the output of comparator IC 103, pin 4 and a burst-synchronous square-wave oscillation at pin 9.

3.2 Synchronization

The "SY" signal takes over the V synchronization of the clock generator IC. Monoflop IC 104 suppresses the pre-equalizing and equalizing pulses so that a H-frequency square-wave oscillation is present at IC 106, pin 6. This takes over the line synchronization of the signal generator IC. IC 105, pins 9 to 15, counts the burst oscillations. After the 4th burst oscillation, the counter stops as the result of the feedback from pin 13 to pin 9 and triggers monoflop IC 104, pin 4. This IC is reset on pin 3 at the start of the first field (frame pulse). Monoflop IC 104, pin 6 enables flip-flop IC 107 clocked by the "H" signal. Ic 107 divides the "H" signal by 2. The H/2 oscillation which synchronizes the color subcarrier oscillator is present at IC 108, pin 3. The H/2 oscillation characterizes whether it is a switched or unswitched line. The 2 oscillators IC 106, pin 1-6 oscillate at a frequency of 14.3 MHz or 17.7 MHz. The oscillators can be switched on by the control circuits "3.5 MHz" or "4.4 MHz". With PAL the 17.7 MHz oscillator is activated and clocks the start-stop counter IC 105, pin 2. This counter is started by the H pulse (pin 1) and stopped by a pulse coming from burst (pin 7).

The counter attains different output statuses depending on the phase position of the burst. L level appears in the 2nd to 4th field and H level in the 5th to 8th field. at the output of pin 4. Gate IC 108, pins 11-13 cause every second line to be faded out. The signal passes through NAND gate IC 106, pins 8-9 and is synchronized with the V25 pulse (flip-flop IC 109, pins 2-6). If the externally supplied signal has no color, the flip-flop is reset at pin 1. IC 108, pins 4-6 cross couples the signal with the differentiated frame pulse. There is a pulse present at the PR output which characterizes the beginning of a sequence of 8 (short pulse at the start of the 1st field, 9th field etc.). This pulse arrives at the signal generator IC and carries out synchronization of the sequence of 8 there.

3.3 H phase shift

The video signal generated by the VG 1100 can be shifted relative to the H phase opposite the external video signal. This takes place via H synchronization (IC 217, pin 4). Capacitor C 247 is charged by current balancer T 205 and discharged by T 206, as controlled by the H__Ext. pulse. The resulting ramp signal arrives at the input of comparator IC 217, pin 2. Data are written serially to shift register IC 214 ("Data" signal circuit). The "CLK" signal clocks the shift register and data are transmitted to the DA converter over the "LE__Delay" pulse. The DC voltage present at pin 4 of the DA converter is amplified by IC 201 and arrives at pin 1 of comparator IC 217. The DC frequency determines the switchover time-point of the comparator. A delayed switchover of the comparator results in a delayed H pulse of the generated video signal.

3.4 Secam synchronization

As the phase position is changed from line to line with the frequency-modulated Secam signal, a suitable switching voltage must also be obtained here.

To do this the Secam color signal is decreased at comparator output IC 103, pin 9 and transistors T 101 and T 102 applied. These transistors control the FM demodulator IC 112 in anti-phase. The maximum deviation is set at L 100, i.e. the greatest possible voltage difference should be present at measuring points MP 102 and MP 103. In line D_R H level is present at the output of comparator IC 113, pin 1 and in line D_B L level. This signal is transferred with flip-flop IC 114, pins 1-6 during the burst time. This flip-flop can be set at pin 4 with control circuit "Secam On" (L level is present here with the Secam standard). IC 114, pins 8-13 serve to make available a clock pulse which will appear defined during the back porch. After passing through gate IC 106, pins 8-10 the Secam oscillation is synchronized with the V25 pulse (IC 107 flip-flop). The "PR" signal circuit changes its level status after each frame with the Secam standard.

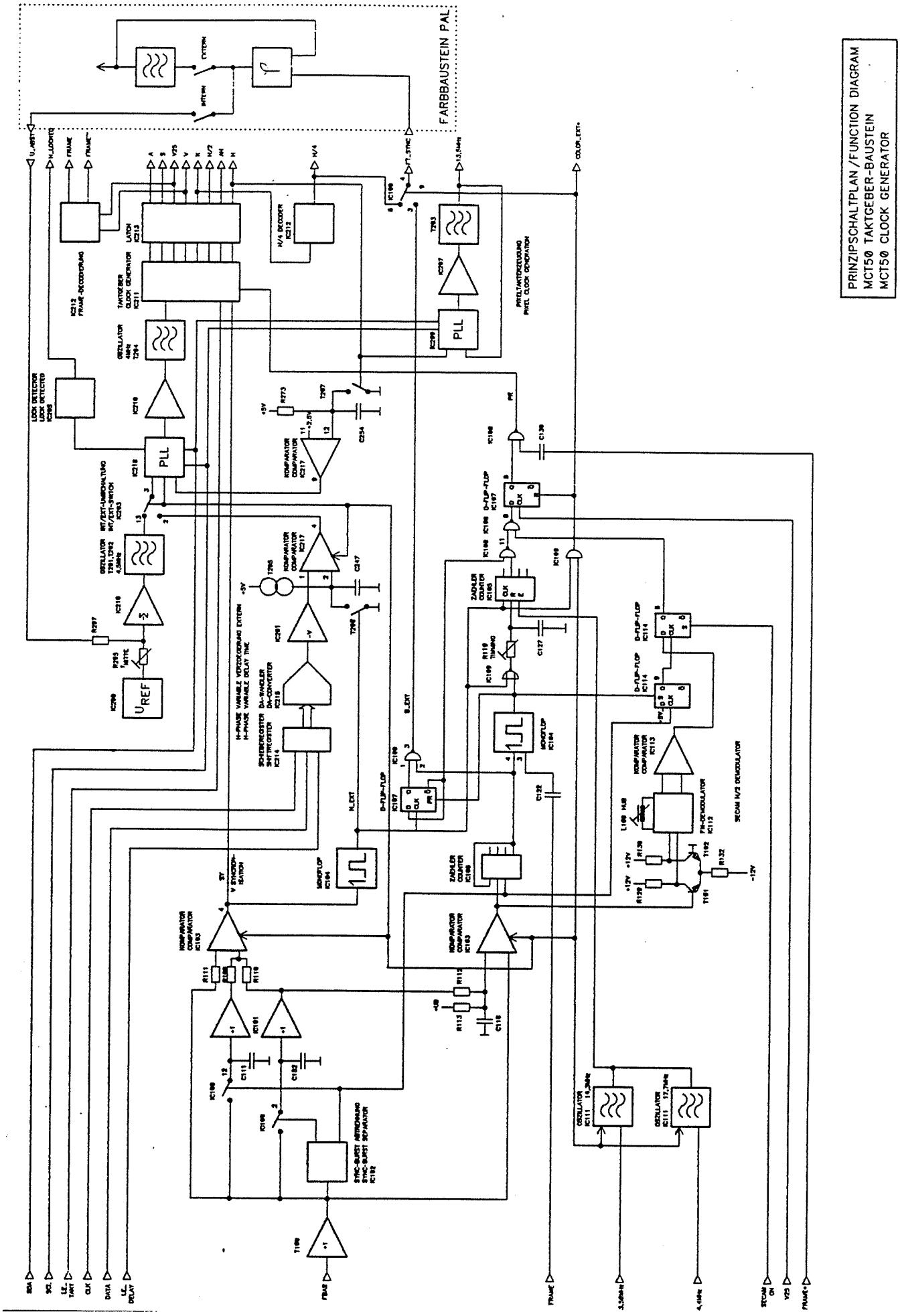

GRUNDIG electronic

Functional description
MCM 50 YUV memory module

1. General
2. Component RAM
3. Video RAM
4. Text/circle addition

1. General

The data computed by the µP module are saved by the memory module. The data containing information about a line are contained in the component RAMs. Video RAM determines which line is to be read out of the component RAMs. Occurring text signals are added digitally to the data read out of the memory modules.

2. Component RAM

The data computed by the µP module arrive at the bidirectional bus drivers IC 103 to IC 106. IC 103 is responsible for the Y, IC 104 for the U and IC 105 for the V signal. As these ICs can only process 8 bits, a further driver is necessary (IC 106) to operate the 2 lowest-value bits of the Y, U and V signals. Decoder IC 101 supplies the Write ("WE") and read ("OE") signals for the bus drivers. The data from the bidirectional bus drivers are transferred to the memory ICs. IC 107/111 is responsible for the Y, IC 108/112 for the U and IC 109/113 for the V signal. IC 110/114 processes the lowest-value bits of the Y, U and V signals. These RAMs are addressed (A0...A9) by pixel bus PB__0...9 and the higher-value address inputs by the frame bus (A10...A15).

3. Video RAM

Data DB__0...7 arrive at bidirectional bus driver IC 204 and are transferred from here to video RAM IC 203. Control circuits "CP__read" and "LE__write" select whether the RAM should be written to or read. Video RAM IC 203 is addressed (ZA__0...12) by the line counter (located on the sequence control). The data read out of RAM IC 203 are buffered with latch IC 206. The "FB__LE" signal clocks this IC. The output of latch IC 206 addresses the component RAMs as a frame bus, i.e. the data from video RAM determine which line is to be read out of component RAM. In addition, information such as whether VPS is switched on (VPS ON) etc. is tapped by latch IC 205. Signal "ZA__13" clocks this IC.

4. Text/circle addition

If a test pattern containing a circle or text is selected, the appropriate signal is added to the data read out of the component RAMs. The text/circle signal is only added to the higher-value bits (D6 to D9) and the lower-value bits (D0-D5) is passed on to the output over latches. Latch IC 301 switches the V signal, IC 302 the U signal and IC 304 the Y signal to the output. The clock signal for this IC (13.5 MHz) is delayed by one clock period by flip-flop IC 308. This ensures a synchronous switching of the latches and the adders.

The "circle" and "blanking" signals are written serially to the shift registers generated by IC 306. The "CLK__ADD" signal clocks the shift registers. The outputs of IC 306 supply the Y adder over OR gate IC 307. The wiring of the OR gate prohibits the abrupt supply of the "circle/blanking" signal. The "circle/blanking" signal is applied to the Y signal by adder IC 305 and the UV signal is added to the "circle/blanking" signal by IC 303. The read out data are available at plugs S 782 (Y data), S 783 (U data) and S 784 (V data) for further processing.

PRINZIPSCHALTPLAN/FUNCTION DIAGRAM
MCM50 YUV-SPEICHER-BAUSTEIN
MCM50 YUV-MEMORY-CIRCUIT

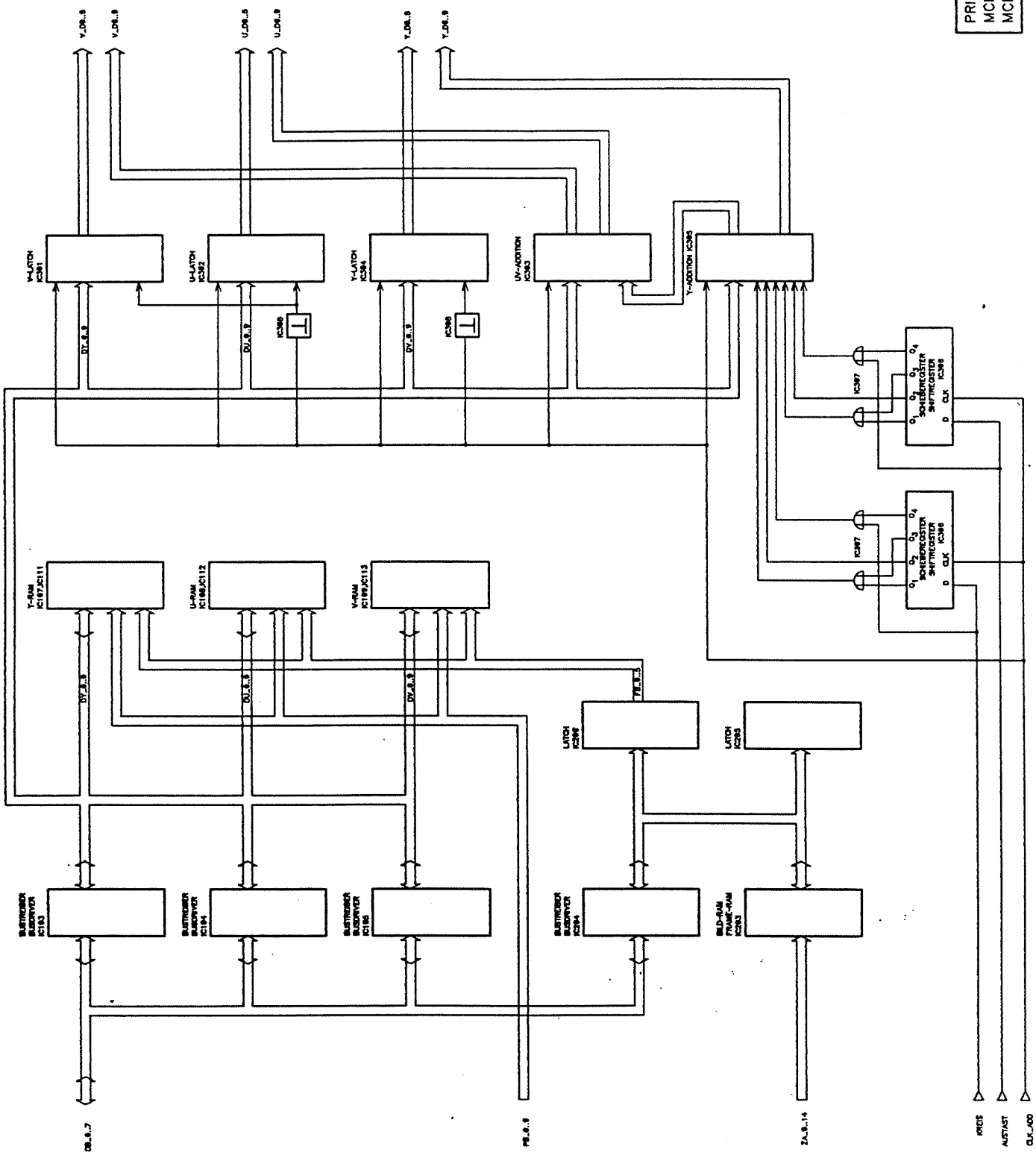

GRUNDIG electronic

Functional description MCO 50 multiburst module

1. General
2. Digital component
2.1 RAM line
2.2 RAM field
2.3 Control RAM
2.4 Period counter and Start-Stop switch
3. Analog component
3.1 Generator control
3.2 Setpoint value control
3.3 Triangle wave generator
3.4 Start-Stop switch
3.5 Triangle to sine converter
3.6 Output amplifier

1. General

The multiburst module is a digitally controlled triangle wave generator with a subsequent triangle to sine converter. The digital data control the triangle wave generator by means of 2 DA converters. One DA converter is responsible for sweep over line, the other for sweep over video. In the case of sweep over line, the triangular pulses generated are counted additionally. When a specified value is reached, the triangle wave generator is switched off. In this way a defined oscillation figure is achieved.

2. Digital component

2.1 RAM line

The multiburst data for one video line are contained in the 2k RAM IC 1. These control the DA converter IC 21. The RAM can be written to or read by the processor by means of bidirectional bus driver IC 2.

2.2 RAM field

The data for 4 video fields are contained in the 8k RAM IC 6. These control the DA converter IC 22. The RAM can be written to or read by the processor by means of bidirectional bus driver IC 7.

2.3 Control RAM

The 2k RAM IC 9 contains the data for the settable counters IC 15, IC 16, IC 17, the start pulses for start-stop logic IC 30 and the frequency marker control. The data from RAM IC 9 is buffered in IC 10. The RAM can be written to or read by the processor by means of bidirectional bus driver IC 8. Multiplexer IC 4 controls the read and write direction of bus drivers IC 2, IC 7, IC 8 and RAMs IC 1, IC 6 and IC 9.

2.4 Period counter and Start-Stop switch

The fast three-stage 4 bit synchronous counter comprises IC 15, IC 16 and IC 17 and contains data for the set input from RAM IC 9 via buffer IC 10. The transfer pulses and the requisite clock pulses for the counter latches are retrieved from the buffer before the period count starts. The clock pulses for transferring data are delayed and shortened by IC 11 and IC 12 and are transmitted to the clock inputs of the counters via IC 13. After the counters have been set, RAM IC 9 outputs a negative start pulse via the IC 10 buffer at the appropriate pixel address. This is shortened by IC 18 and IC 19. This causes IC 20, switched as an RS flip-flop, to flip and the triangle wave generator starts up. Its clocks, which are converted from ECL to TTL level by means of T 25, T 26 and T 27 (CLK multiburst), control the clock inputs of counters IC 15, IC 16 and IC 17 by means of IC 13. The counters count until output Qd of counter IC 17 switches to logical "1". The triangle wave generator is stopped by the flopping RS flip-flop.

3. Analog component

3.1 Generator control

The control voltages for the triangle wave generator are generated by DA converters IC 21 and IC 22. IC 21 supplies voltage for multiburst signals which change during a video line (e.g. frequency packets, sweep over line). IC 22 generates control voltages for multiburst sweep over field. These control voltages are buffered with 1/2 IC 24 and 1/2 IC 26, added by R 24 and R 25 and supplied to the controllable current source 1/2 IC 24, T 3 (see triangle wave generation). The reference voltages for the two DA converters are obtained from the general 2.5 V reference by IC 23 and T 2.

3.2 Setpoint value control

The setpoint value for comparator IC 29 is decreased with increasing frequency to linearize the tuning characteristic of the triangle wave generator (current source 1/2 IC 26, T 4). The maximum frequency values are adjusted by R 29 (for sweep over field) and R 33 (for frequency packets and sweep over line). The minimum frequency is adjusted by R 20.

3.3 Triangle voltage generation

The voltage controlled current source 1/2 IC 24, T 3 supplies the constant load current - doubled by current mirror IC 34 - for capacitor C 54 which determines frequency. T 8 and current mirror T 5, T 6 and T 7 are open in this case.

The ramp-shaped voltage at C 54 controls voltage comparator IC 29 by means of buffer amplifier IC 28 until it reaches a positive setpoint value. The comparator output blocks T 8 (and with it T 5, T 6 and T 7), T 9 is opened and discharges C 54 in the same form. At the same time the polarity of the comparator setpoint value is switched over by means of T 12, T 13, T 14 and T 15 until the voltage at C 54 reaches the negative setpoint value of IC 29.

3.4 Start-Stop switch

The multiburst oscillation can be stopped by IC 30, start-stop switch T 18, T 19, T 20, T 21 and by current mirror T 23, T 24 at the passage through zero of the increasing ramp voltage.

3.5 Triangle to sine converter

The triangle wave is converted to sine form by Ic 33. The amplitude of the multiburst signals is adjusted by R 78, the sine form with R 94 A and the symmetry by R 112.

3.6 Output amplifier

IC 25 amplifies the sine voltage to the requisite output level. R 97 executes the zero setting. R 91 and R 106, R 92 and R 106A adjust the low-resistance amplifier output to two 50 Ω coaxial cables. Frequency markers can be set by decreasing the amplitude by means of T 39 and T 40.

PRINZIPSCHALTPLAN/FUNCTION DIAGRAM
MC050 MULTIBURST-BAUSTEIN
MC050 MULTIBURST-CIRCUIT

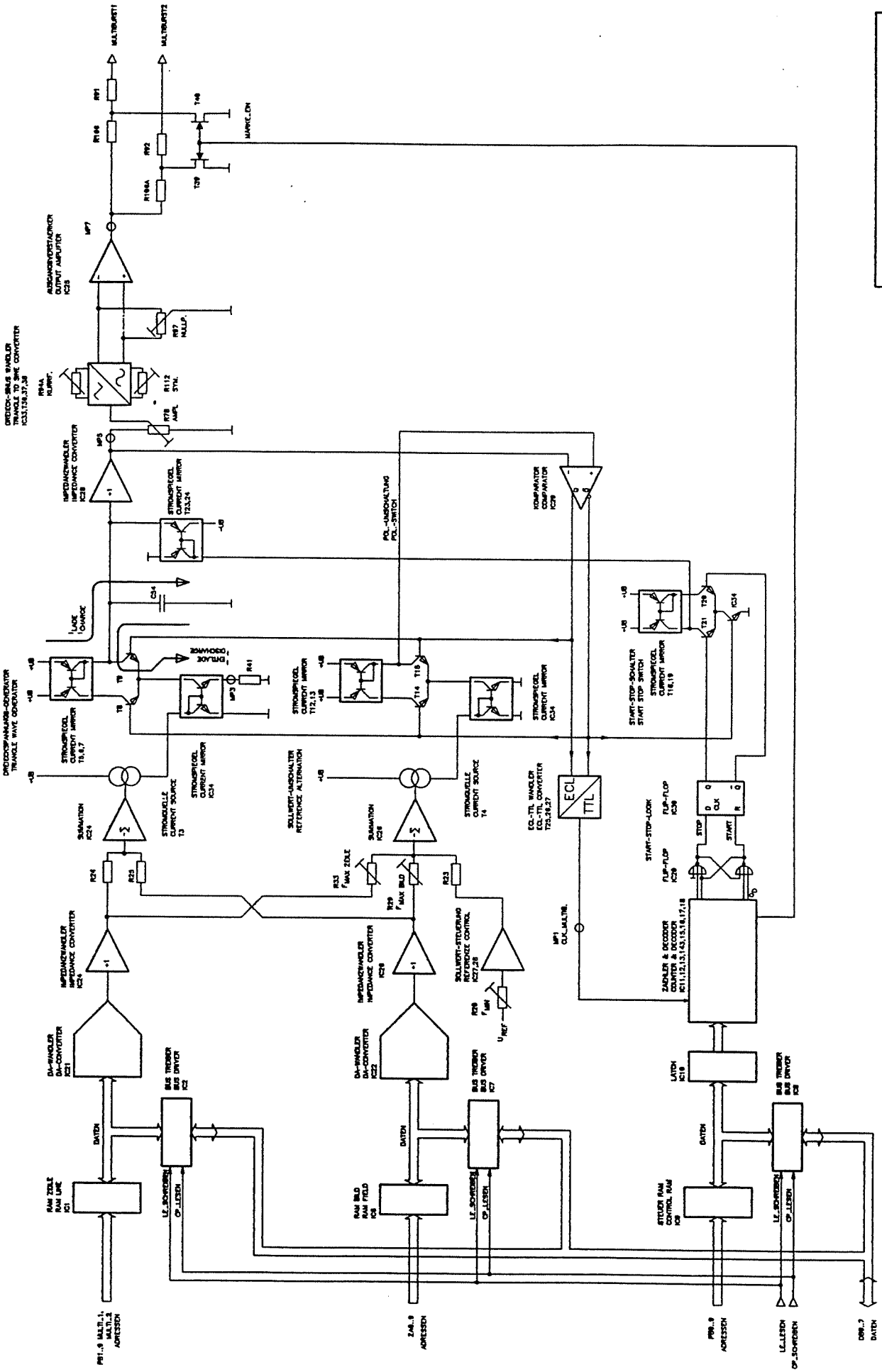

GRUNDIG electronic

Functional description MCV 50 video card

1. General

2. CVBS signal

2.1 Y signal processing (Y DAC)

2.2 Summation

2.2.1 Summation of Y, VT/VPS/8 V and attenuator

2.2.2 Summation of S, MB, CH, text and output amplifier

2.2.3 Y__S output

2.2.4 CH__S output

2.2.5 Synchronous signal processing

2.3 Input register

2.3.1 Chroma attenuator

2.3.2 Multiburst attenuator

2.3.3 CH, MB and Y attenuator

2.4 Black burst

2.4.1 Synchronous pulse generation

2.4.2 Black burst switch

2.5 U DAC; V DAC

1. General

The video card makes the following signals available to the user at 8 output sockets:

- CVBS (on 3 parallel sockets)
- Black burst (on 3 parallel sockets)
- Y__S (luminance of the Y/C output)
- CH__S (chrominance of the Y/C output)

The video signals are composed of digital and analog components and the amplitudes are adjusted using multipliers. If necessary, certain signals are restricted in their rise and fall times using low-pass filters. The digital color difference signals R-Y or -(B-Y) are converted to analog signals. Table 1 provides details on the basic processing of the individual components.

2. CVBS signal

The digital Y signal is converted to an analog signal. After passing a low-pass filter the VPS signal and the 8 V pulse is added to it. An attenuator follows and a further addition stage (text, multiburst and S signal). The chroma signal is also added in the output stage that follows. The CVBS signal is available at 3 BNC sockets.

2.1 Y signal processing (Y DAC)

The Y signal is present in digital form (10 bit parallel) at plug ST 752. The appropriate clock (13.5 MHz) is also there. The Y signal must be delayed to compensate the operating time differences between the luminance and chroma signals. IC 600 to IC 604 constitute an array of 10 parallel D flip-flop chains of 5 flip-flops each. IC 600 to IC 602 and IC 606 are clocked synchronously. The requisite clock can be tapped in inverted or not inverted form as compared with the clock using jumper BR 600 on plug 752. This results in an operating time of 37 ns. The fast operating circuit from T 600 to T 603 makes the clock available. IC 603, IC 604 and IC 607 obtain the clock "Clock + T" which trails by an adjustable time. Circuit T 604 to T 608 is used for this purpose. The delay of the analog all-pass T 604, C 622 and R 666 can be adjusted using controller R 666 (ca 30 ns). Resonant circuit L 601, C 629 and R 659 restricts the bandwidth of the input signal in order to avoid the creation of oscillations caused by the all-pass. As the output of the all-pass is too high-resistance and the rising time is too long, comparator T 605, T 606, T 608 is connected in series. The latter clocks flip-flops IC 603, IC 604 and IC 607.

The Y signal thus delayed arrives at DA converter IC 608 where it is converted to an analog voltage. The Y amplitude can be adjusted with R 681 via the DC voltage amplifier IC 609. IC 610 constitutes the difference

Table 1

Component	Source	Form	Processing	Attenuator	Filter
Y	Memory card	10 bit digital	DA converter	yes	9-pin $\sin^2$, 100 ns HAD
CH	Color card	analog	-	CH/burst separate	-
VT/VPS	Teletext card	analog	-	-	-
Sync.	Clock generator	digital	DA converter	yes	5-pin $\sin^2$, 200 ns HAD
8 V pulse	Clock generator	digital	DA converter	-	3-pin $\sin^2$, 200 ns HAD
MB	Multiburst card	analog	-	yes	-

between the output voltage and the voltage analogous to the black value (IC 608, pin 4).

L 301 to L 304 constitute a filter 9 together with the surrounding capacitors and resistors. Order in accordance with Arend Kastelein. The filter has a $\sin^2$ pulse as a pulse response and a half-amplitude duration of HAD = 100 ns.

2.2 Summation

2.2.1 Summation of Y, VT/VPS, 8 V and attenuator

IC 300 adds the VT/VPS signal and the 8 V pulse to the Y signal. The amplitude of the BA signal can be adjusted using attenuator IC 301, IC 303, IC 310, IC 311 and the surrounding components. Several attenuators of an almost identical kind are present on the video card. The method of operation is described under 2.3.3 "CH, MB and Y attenuators".

2.2.2 Summation of S, MB, text, CH and output amplifier

IC 305 adds the multiburst signal and the synchronous pulse to the BA signal. C trimmer C 332 is used to adjust the frequency response of the multiburst signal. The chroma signal is added to the VBS signal at output amplifier IC 314. The standard CVBS signal arrives at 3 BNC sockets switched in parallel.

2.2.3 Y__S output

The completely added VBS signal is decoupled for the Y__S output before the addition of the chroma signal (IC 305, pin 11). The attenuators for BA, S and MB operate in the same way as for the CVBS signal.

2.2.4 CH__S output

The chroma signal is tapped after amplifier IC 105 and relayed to IC 306 for this output. The chroma attenuator is equally operational for this output as for color in the CVBS output.

2.2.5 Synchronous signal processing

The synchronous pulse to be added at IC 305, pin 4 must first be processed. To do this, data are shifted over the circuit "Data__4" to shift registers IC 310, IC 312 in accordance with the amplitude of the synchronous pulse. The "CLK" signal clocks the shift registers and a pulse on the "LE__VID" circuit causes the shift registers to store the written data. The "S-DIG" signal is delayed with the IC 308, IC 309 instruction. The delay can be adjusted using R 338.

This delayed "S-DIG" signal switches the stored data to the output of the shift register over the "OE" input (IC 312). This always happens during the synchronous time. In the remaining time a constant value for resistors R 341 to R 348 is present at the input of the DA converter. The synchronous pulse obtained at the output of the DA converter is restricted in its rising and falling times by low-pass L 305 and is added to the Y, MB and text signal by IC 305.

2.3 Input divider

2.3.1 Chroma attenuator

The chroma signal is supplied by the color board AC-linked. It passes through attenuator IC 100, T 101 and is amplified by IC 105. The addition to the VBS signal takes place over R 325 in output amplifier IC 314, (see 2.3.3 for method of operation of the attenuator).

2.3.2 Multiburst attenuator

The MB signal arrives at amplifier IC 206 via attenuator IC 260, T 201. The MB frequency response can be adjusted by C trimmer C 208. IC 305 adds the MB signal to the VB, S and text signal. (see 2.3.3 for method of operation of the attenuator).

2.3.3 CH, MB and Y attenuator

The amplitudes of the chroma, multiburst and Y signal can be electronically adjusted using attenuators. As these 3 switching units are of an almost identical structure, only the Y attenuator is described here.

A digital data stream is written to shift register IC 310 (DATA__4 signal) depending on the desired amplitude. The shift register is clocked by the "CLK" circuit. The "LE__VID" pulse causes the shift register to transfer its data to the outputs. From this, DA converter IC 311 creates 2 inverse currents (pin 2, pin 4) which give rise to a opposite running voltage drop on current mirror T 312, pin 4, pin 3. The multiplier IC is therefore controlled in push-pull (pin 8, pin 10). This IC amplifies the Y signal more or less according to the control voltage applied.

2.4 Black burst

The VG 1100 supplies the black burst signal to 3 parallel sockets. This signal consists of the components S, 8 V and the chroma signal.

2.4.1 Synchronous pulse generation

The S__Dig signal is delayed by the arrangement IC 308, IC 309. The feedback from IC 309, pin 5 to IC 308, pin 1 causes the positive and negative edges of the S pulse to be delayed by the same amount of time. The delay can be adjusted using R 426. The 8 V pulse is added to the S signal in amplifier IC 104. The amplitude of the combined sync signal can be adjusted using R 435. Low-pass L 400, C 424 and C 428 forms the pulse edges similar to $\sin^2$.

2.4.2 Black burst switch

The burst is obtained from the chroma signal. IC 402 operates as an electronic switch. The chroma signal is passed through to the output during the burst time. In the remaining time the IC blocks the signal flow. AH__B, a blanking signal coming from IC 308, controls the control circuit T 401, T 402, T 411 and T 412 in this case. The output of this arrangement controls circuit 402 , pin 8, pin 10 in push-pull. The suppression of the chroma signal is adjusted during the burst-free period using R 404. The DC voltage offset between burst zero line and black value can be compensated by R 408. Output amplifier IC 405 adds the burst signal to the synchronous compound connection.

2.5 U DAC; V DAC

The two DA converters IC 701 (U signal) and IC 801 (V signal) convert the digital data streams U__D0...U__D7 and V__D0...V__D7 to symmetrical streams which are converted to voltage outputs by IC 702 and IC 802. The color difference signals R-Y and -(B-Y) thus obtained are transferred to the color board.

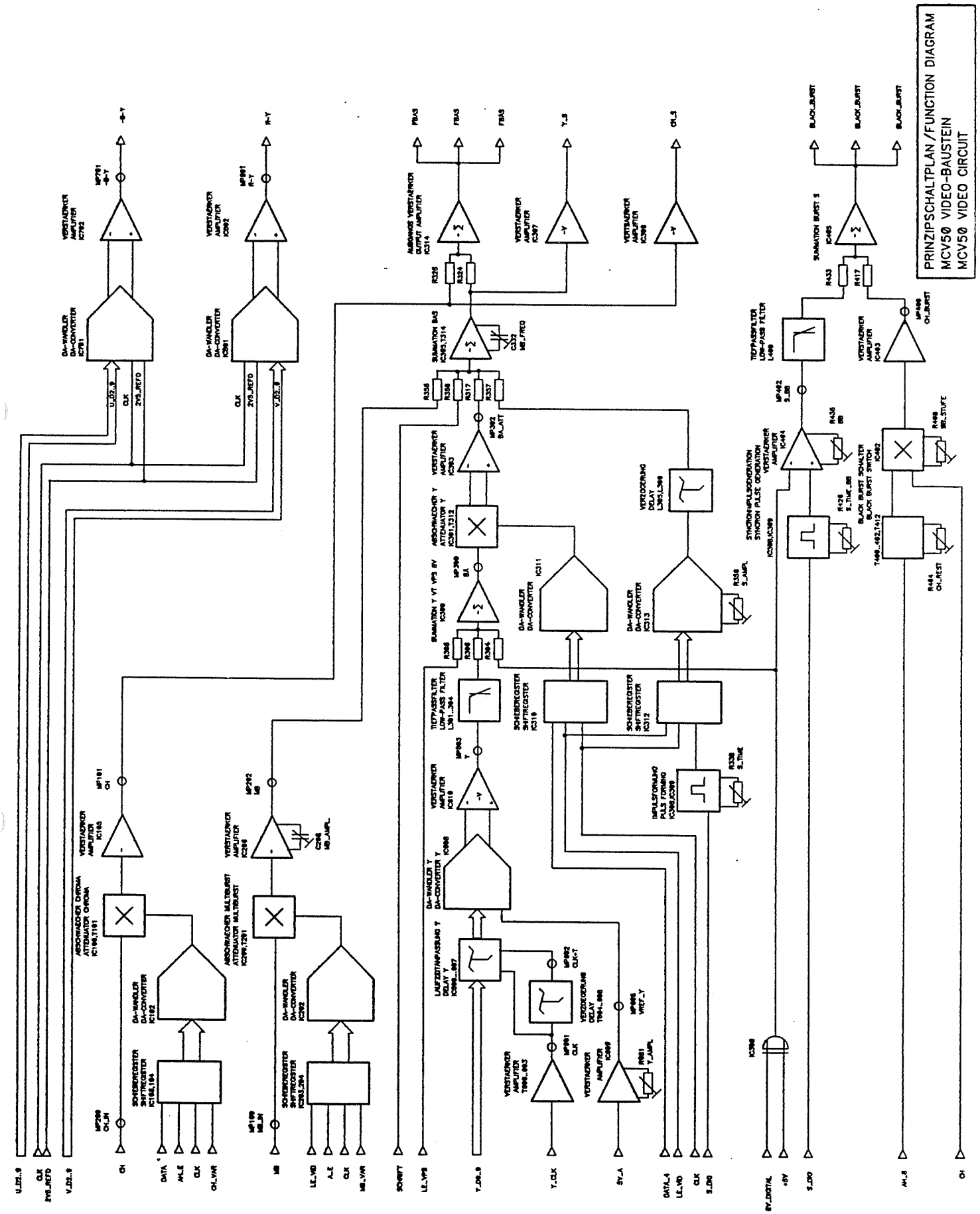

GRUNDIG electronic

Functional description MCC 50 color board

1. General
2. Color carrier component
2.1 "INTERNAL" operating mode
2.1.1 Sc to H phase control
2.1.2 25 Hz offset generation
2.1.2.1 25 Hz sawtooth generation
2.2 "EXTERNAL" operating mode
3. Oscillator component
3.1 Standard selector switch and frequency control
3.2 Temperature control
4. Modulator component
4.1 Processing the color subcarrier
4.2 Burst key pulse
4.3 Auxiliary voltage generation for residual carrier suppression
4.4 Color difference signals
4.5 Modulators
4.6 Chroma bandwidth
4.7 Standard selector switch
4.8 Chroma low-pass and output

1. General

The color board modulates the color difference signals R-Y and -(B-Y) with the color subcarrier. The color subcarrier is generated with a temperature-controlled oscillator.

In the "INTERNAL" operating mode, this oscillator creates the reference from which all other video clock signals are derived. To do this, the color subcarrier oscillation is continually compared with the H/4 signal, a tuning voltage is generated and the clock generator module thus synchronized. In addition the so-called 25 Hz offset is generated in the color carrier component.

2. Color carrier component

2.1 "INTERNAL" operating mode

2.1.1 Sc to H phase control

The FU color subcarrier signal (square wave signal) coming from the modulator component is converted to a sine signal by low-pass L 101, L 102, C 102...C 106. The color subcarrier oscillation is present at low resistance at sampling transistor T 106 via the non-inverting operation amplifiers T 101, T 102, T 103 and impedance converter T 104. The H/4 signal leaves the clock generator module and arrives at switching transistor T 110 which discharges capacitor C 133 which has been charged by the constant current source T 111. The ramp signal thus obtained arrives at the plus input of comparator IC 106. The 25 Hz offset generation controls the minus input (described below). The output signal of comparator IC 106 is converted to a needle pulse by pulse former IC 107 and the subsequent impedance converter T 108 and T 109 controls sampling transistor T 106. A DC voltage is obtained at C 114 which depends on the phase shift of the color subcarrier oscillation to the H/4 pulse. This voltage is cross coupled with IC 102. After passing through loop filter R 122, R 123, C 117 and C 118, the DC voltage arrives at electronic circuit IC 114, pin 10 via OP IC 102 from whence it is supplied to the clock generator module as tuning voltage U_{TUN}. In this way a stable position of the Sc to H phase is ensured.

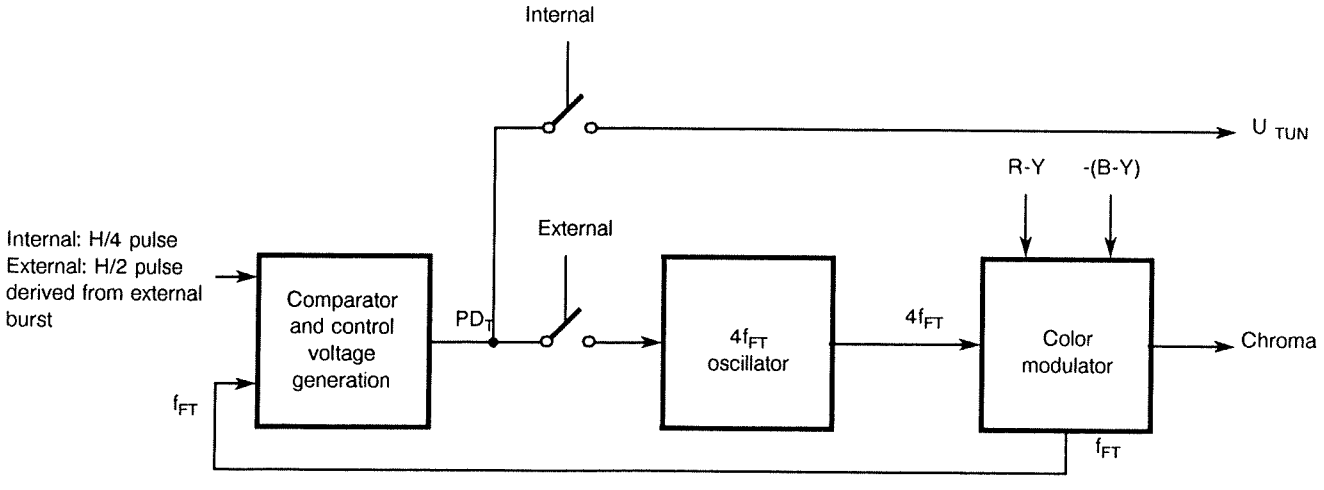

2.1.2 25 Hz offset generation

According to PAL specifications, the color subcarrier is not a multiple of the horizontal frequency but is defined according to the following equation:

$$\frac{f_H}{4} = \frac{f_F - 25\ Hz}{1135}$$

The 25 Hz offset is reached by supplying a ramp signal derived from the H/4 pulse to the plus input of comparator IC 106, and a 25 Hz sawtooth signal to the minus input. The comparator switches as soon as the plus input (ramp signal) becomes more positive than the minus input (falling sawtooth oscillation). The 25 Hz sawtooth pulse which is relatively slow as compared with the H/4 ramp is equivalent to a slowly decreasing voltage at the minus input. In this way the comparator reaches its switching threshold somewhat earlier with every H/4 ramp. The sampling transistor would also switch somewhat earlier via pulse former IC 107, T 108 and T 109 with the control loop open so that the color subcarrier oscillation would not be interrogated at the passage through zero but rather as soon as on the falling edge. The control voltage obtained at C 114 readjusts (via loop filter R 122, R 123, C 117, C 118 and IC 102) the oscillator located on the clock generator module. The 25 Hz offset is thus achieved.

2.1.2.1 Hz sawtooth generation

A DC voltage at the output of the DA converter charges capacitor C 132 when switch-off transistor T 114 closes. The level of this voltage determines the offset between the Sc to H phase (can be input by the user via the control board). Capacitor C 132 is discharged at the 25 Hz rhythm via current mirror T 115 and T 116. To do this the control voltage at output IC 102 is interrogated by two sample-and-hold circuits IC 114, C 119 and C 120. The voltages obtained are subtracted from each other using IC 105 and supplied to the current mirror T 115, T 116 over integrator IC 105, C 112. The sawtooth decreases more or less quickly depending on the level of the sampled control voltage. If a standard not containing the 25 Hz offset is selected, sampling transistor T 114 is continually opened over IC 100. Sawtooth voltage cannot be generated in this case.

2.2 "EXTERNAL" operating mode

In this operating mode all the H cross-coupled signals in the clock generator module are derived from an external signal (Sync. Ext. socket). An H/2 oscillation derived from the external burst arrives at the control input of switching transistor T 110 over the "FT_SYNC" circuit.

This pulse samples the color subcarrier oscillation (sampling transistor T 106) using comparator IC 106 and pulse former IC 107, T 108 and T 109. The voltage obtained at C 114 is decoupled by IC 102, passes through loop filter R 122, R 123, C 117, C 118 and amplifier IC 102. This signal readjusts the f_{FT} oscillator via electronic circuit IC 114 (in oscillator switching

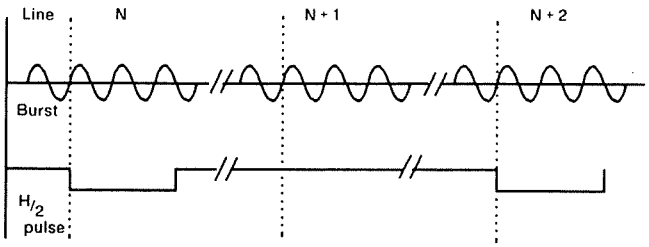

component). The SC to H phase cross coupling is thus achieved.

The 25 Hz offset generation is switched off by IC 100 in this operating mode, as the external signal can already contain the 25 Hz offset.

3. Oscillator component

3.1 Standard selector switch and frequency control

The oscillator on the color board generates the appropriate 4-fold color subcarrier frequency in accordance with the standard selected (PAL B/G, NTSC, PAL M or PAL N). If the PAL B/G standard is selected, for example, data are transmitted to shift register IC 303 over the "D_OS" circuit. This IC is clocked by the "CLK" signal. A pulse in the "STR" circuit causes the shift register to transfer data to the outputs. This causes multiplexer/demultiplexer IC 302 to be switched (in the case of PAL B/G in the position illustrated).

On the one hand the quartz responsible for this standard is activated and on the other a tuning voltage derived from the reference voltage and adjustable with control R 313 is switched through. This tuning voltage controls capacity diode D 305 of the oscillator over inverting amplifier IC 301. It is a Clapp oscillator (T 301). Emitter follower T 302 makes available the 4-fold color subcarrier frequency at resistor R 333 at low resistance. In operating mode "COLOR_EXT" an additional tuning voltage "PD" is relayed over electronic switch IC 114, pin 6 to the input of inverting operation amplifier IC 301, pin 6 where it is added to the already present tuning voltage. This is not the case with the "INTERNAL" operating mode. Here the "PD" voltage is relayed to the output of the module over electronic switch IC 114, pin 10. The frequency of the oscillator is adjusted using controls R 313 to R 316.

R 313	→	PAL B/G	→	17.734 MHz
R 314	→	NTSC	→	14.318 MHz
R 315	→	PAL M	→	14.302 MHz
R 316	→	PAL N	→	14.328 MHz

3.2 Temperature control

The oscillator is fitted with a temperature control to increase the frequency stability. T 307 operates as a sensor. With an increase in temperature a lower level voltage is released at this transistor. This voltage is amplified by operation amplifier IC 304 and the subsequent integrator IC 304, C 317 and C 318 provides an appropriate time constant. The quartzes are heated up to 60°C by current mirror T 306, T 307. The temperature adjustment takes place via R 341, a voltage of 20 mV must be set at measuring point MP 302 at an ambient temperature of 20°C.

4. Modulator component

The color coder modulates the color subcarrier with the two color difference signals U and V, and generates the burst. Quadrature modulation of the amplitude with a suppressed carrier is involved here. The input signals must first be processed to abide by the PAL and NTSC specifications.

4.1 Processing of the color subcarrier

The 4-fold color subcarrier frequency is supplied to divider IC 202. The outputs of this IC control 2 flip-flops.

These ICs are switched in such a way that a trailing signal of 90° as compared with Qu is present at output Qv. The fine tuning of the 90 phase takes place on R 208.

Electronic switch IC 201 changes over at every line. In this way outputs Qv and Qu are also phase-changed from line to line. This changeover can be switched using the "PAL__OFF" circuit.

Pulse diagram of color subcarrier processing

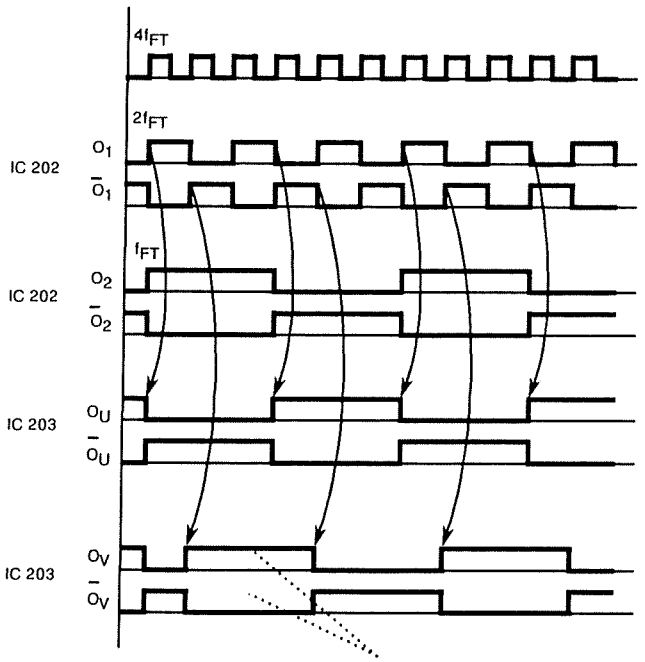

These signals are phase-changed by 180 °C from line to line using IC 201.

4.2 Burst key pulse

The burst key pulse (active L) is present at the input of low-pass L 201, L 202, C 208 to C 218 via electronic switch IC 201 +5 V. This low-pass (fgr = 1.3 MHz) restricts the rising and falling times of the pulse thus obtained. The burst key amplitude at MP 201 is adjusted to 2.8 V using the R 220 control. The burst key pulse arrives at the summing amplifier IC 207 and IC 208 via electronic switch IC 205. In the PAL operating mode, IC 207 receives this pulse over R 233, R 234 and IC 208 over R 252, R 253. If NTSC is selected, IC 208 does not receive any burst key pulse, but IC 207 does via R 235, R 236.

4.3 Auxiliary voltage generation for residual carrier suppression

Depending on the control position of R 227 and R 223, a control voltage of +8 V to -8 V is generated from the EREF (= +2.5 V) with the help of operation amplifier IC 206. This voltage is applied to the summing amplifiers IC 207 and IC 208. In this way the residual carrier suppression can be halted via controls R 227 and R 223 (R 227: U component; R223: V component).

4.4 Color difference signals

The color difference signals -(B-Y) and R-Y arrive at low passes L 203, L 204, C 223...C 226A and L 205, L 206, C 236...C 239 with the limit frequency 1.3 MHz. The signals thus band-limited are added to the above signals (burst key pulse and DC voltage for residual carrier suppression) by the inverting summing amplifiers IC 207 and IC 208.

4.5 Modulators

The outputs of the summing amplifiers IC 207 and IC 208 (pin 6) are present at the modulation inputs of ICS 209 and 210 (pin 4). The processed color subcarrier signal is present at pin 8 and pin 10 of ICs 209 and 210. The color signal is obtained at the outputs of these ICs, pin 6 and pin 12 by means of amplitude modulation with a suppressed carrier. The amplitude of the U modulation product can be adjusted to that of the V modulator using the control R 243.

4.6 Chroma band pass

The color signal is present at 2 band passes L 209, C 246...C 246B (f_{res} = 4.43 MHz) and L 210, C 252...C 252B (f_{res} = 3.58 MHz) via T 201 and T 202, the transistors operating in the common base. The transistors can be disabled via the F__ON/OFF circuit. The color signal is thus switched off. The amplitude of the color signals can be adjusted individually using the controls R 270 (4.43 MHz) and R 275 (3.58 MHz).

4.7 Standard selector switch

The color signal arrives at the standard selector switch via emitter follower T 204 and T 205. Transistors T 206, T 207 and T 208 are switched through in an idle state (control circuits 4.43 MHz, 3.58 MHz and SECAM ON have L level). In this way the emitters of the signal carrying transistors (T 209, T 210 and T 211) receive ca. +3.5 V and the transistors are disabled (the bases are applied to mass potential). If one of the control circuits is carrying H level, the appropriate transistor is disabled (T 206, T 207, T 208). The transistor involved in the signal path (T 209, T 210 or T 211) receives a negative voltage over its emitter resistors and switches the signal through. The appropriate color signal is present at the common collector resistance R 292.

4.8 Chroma low pass and output level

The chroma signal at R 292 arrives at low pass L 211, L 212, C 263...C 277 at low resistance via impedance converter T 212 and is freed from interfering harmonic waves. The discretely structured operation amplifier T 213, T 214 and T 215 operates as an inverting amplifier and supplies the chroma signal to plug S 732 over the output resistance.

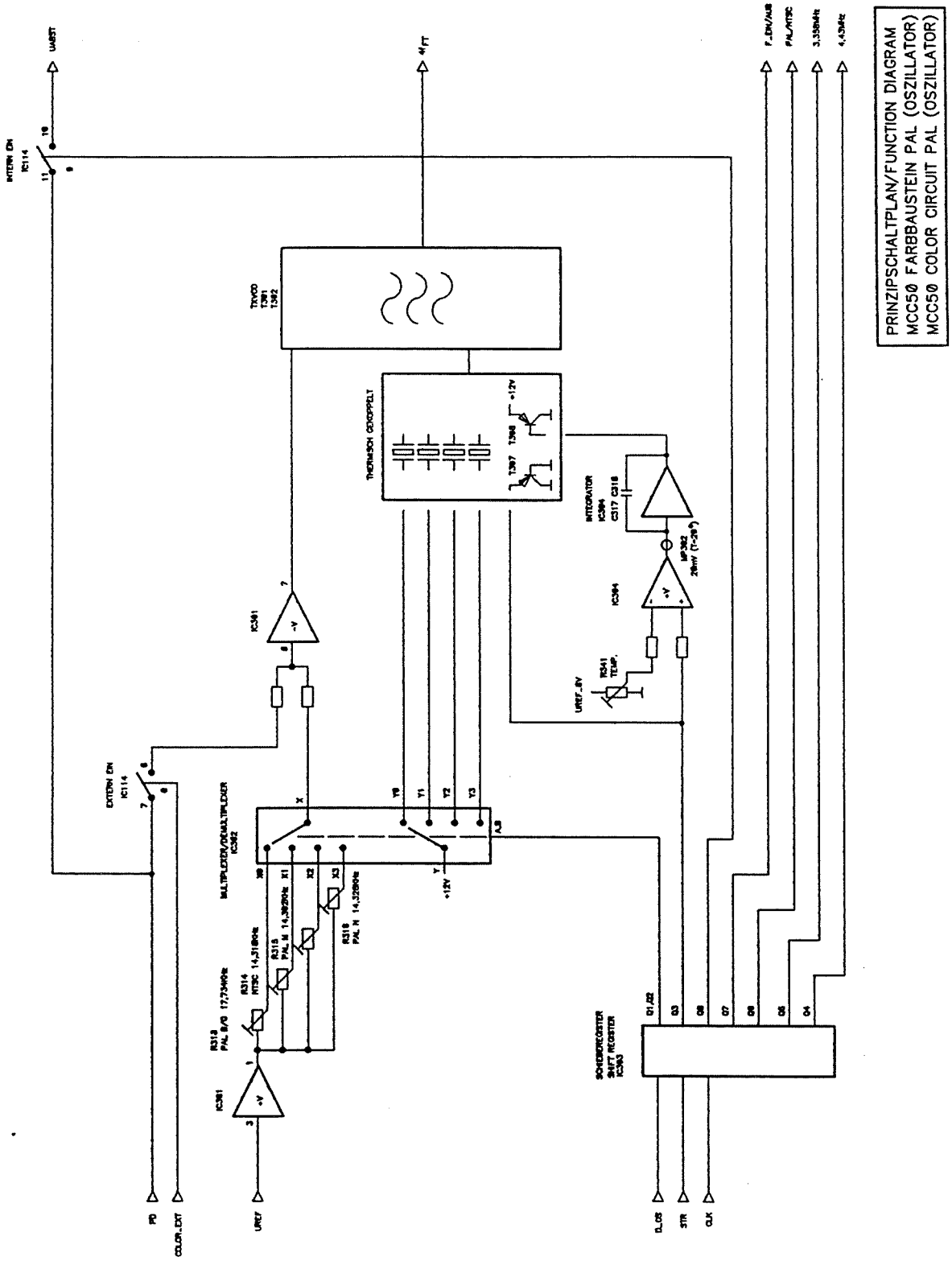

GRUNDIG electronic

PRINZIPSCHALTPLAN /FUNCTION DIAGRAM
MCC50 FARBBAUSTEIN PAL (MODULATOR)
MCC50 COLOR CIRCUIT PAL (MODULAROR)

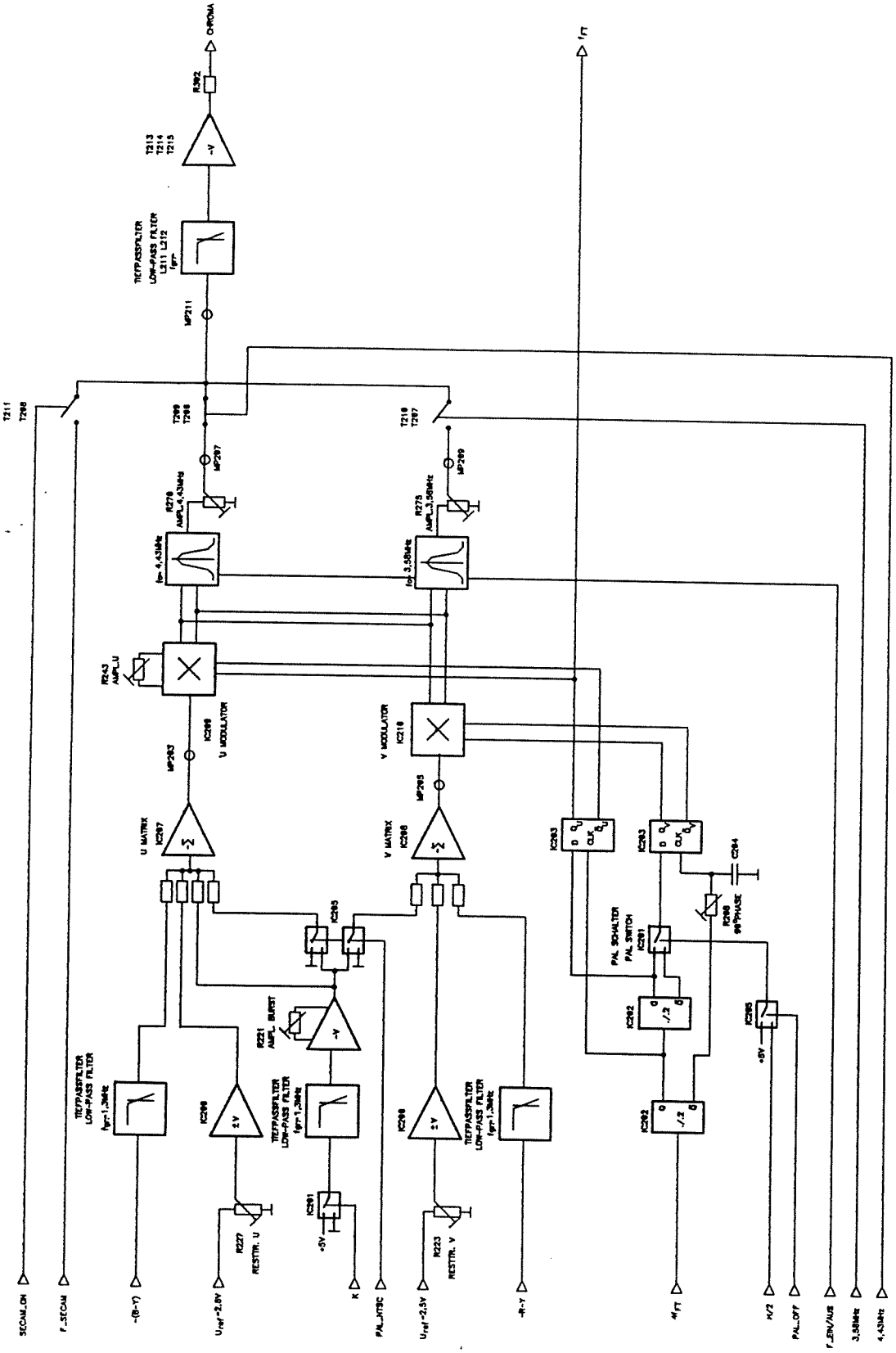

PRINZIPSCHALTPLAN/FUCTION DIAGRAM
MCC50 FARBBAUSTEIN PAL (FARBTRAEGER)
MCC50 COLOR CIRCUIT PAL (COLOR SUBCARRIER)

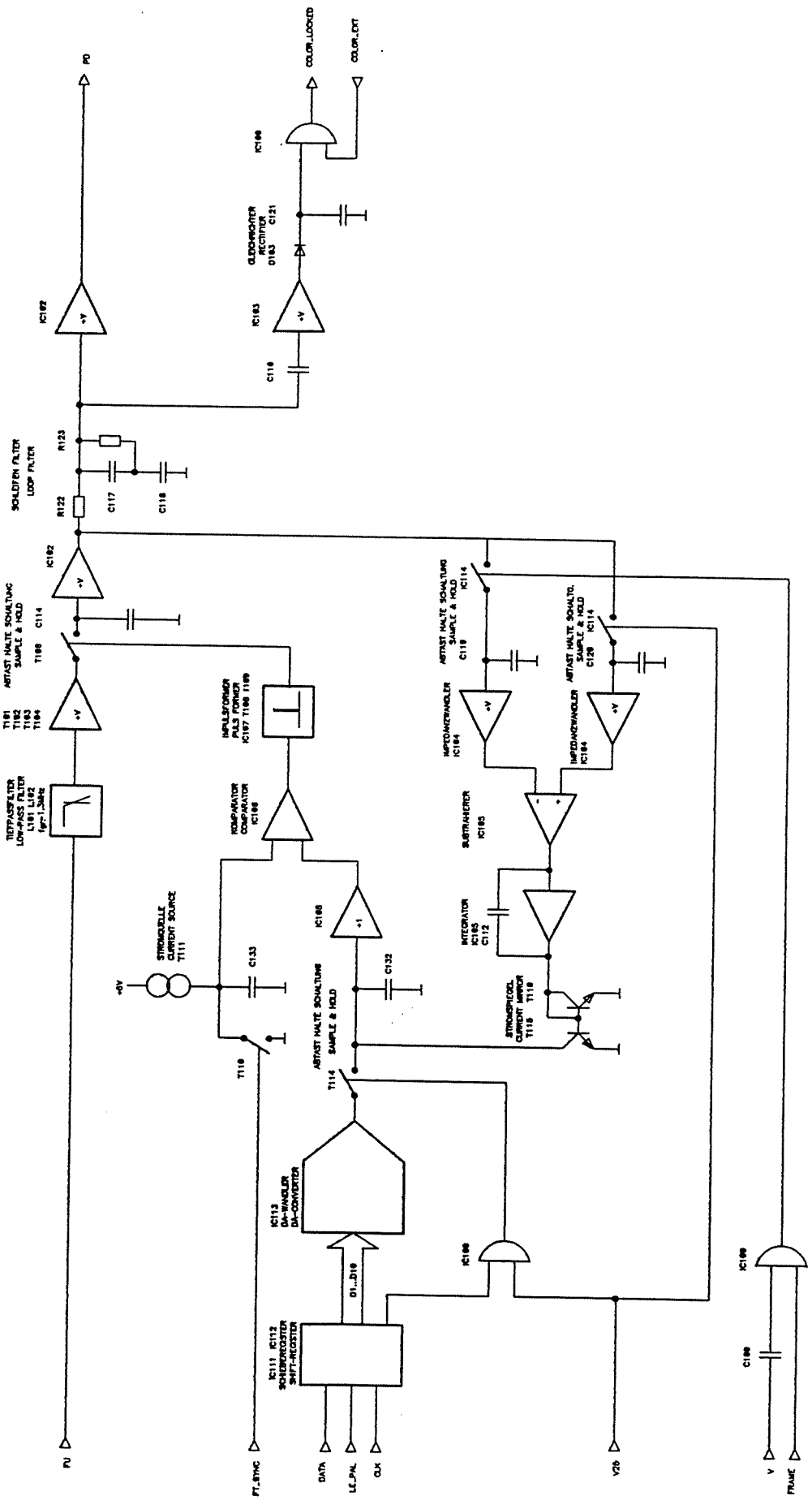

GRUNDIG electronic

Functional decsription MCD 50 TXT/VPS module (option)

1 General

2. TXT

3. VPS

3.1 Writing to VPS RAM

3.2 Reading VPS RAM

4. Function of the soldering straps

1. General

The "TXT/VPS" option makes available the special TV services such as teletext and Video Program Service (VPS). To do this, additional digital data is inserted into line 16 (teletext (VPS)) and lines 6-22 or 319-335. The teletext data are read out of an EPROM (exception: THE CURRENT TIME) and the freely configurable VPS labels are read out of RAM.

2. TXT teletext

IC 16, L 2 and the surrounding components operate as a teletext clock oscillator. IC 9 (PLL) compares the oscillation generated with the H pulse, generates a tuning voltage and readjusts the oscillator over loop filter R 16, C 11, C 12. This results in a clock signal with a frequency of 6.9375 MHz (444 x f_H) which is frequency and phase-locked to the H pulse. The PLL ICs are charged by control circuits SDA and SCL (I^2C bus). Demultiplexer IC 3, pin 9 switches the clock signal to the CLK inputs of column counter IC 2 and shift register IC 11. The outputs of column counter IC 2, pin 5 to 12 address the lower-value bits of EPROM IC 6. The H pulse clocks line counter IC 4 which addresses the higher-value bits of EPROM IC 6. The teletext data read out from EPROM simultaneously are loaded into shift register IC 11 and are read out serially (pin 8). If the data read out of EPROM have the logical status "FF_{HEX}", AND gate IC 7, pin 8 switches to H. Flip-flop IC 12 activates the RAM over its output Q, pin 5 which then causes the current time to be read out. The data stream passes through AND gate IC 14, pins 1 to 3 which was activated on "TXT". The signal is set at the requisite level with the help of resistor R 41 and amplifier IC 8. Low pass L 6, L 7, C 39 to C 42 gives rise to a pulse form similar to $\sin^2$. IC 13 amplifies the signal, R 25 adjusts the amplitude (with TXT: 462 mV_{pp}; VPS: 500 mV_{pp}), the offset can be adjusted with R 26 A. The TXT signal is available over R 49 with a defined impedance of 50 Ω.

3. Video Program Service (VPS)

3.1 Writing to VPS RAM

Before the freely configurable VPS labels can be transmitted, they must be written to RAM. The multiplexers (IC 3) switch to the upper position as the result of the "VPS_ON" and "VT_ON" signals. The "CLK" signal arrives at the "CLK" inputs of the column counter, the shift register and D flip-flop IC 12, pin 11 over demultiplexer IC 3, pin 9. The D flip-flop takes over the positive LE_VPS level at its output pin 8, delayed by one clock period. This causes the demultiplexer to switch over (write mode). The data are written serially to the shift register over the upper demultiplexer (IC 10) and are read out parallel i.e. taken over into RAM as the result of the "PLOAD" pulse. RAM IC 5 is addressed by column counter IC 2. The 3 lowest-value bits are connected with AND gate IC 17 so that a "WE" or "PLOAD" pulse is generated after every 8th clock pulse. (1 character = 8 bits) The two middle demultiplexers in IC 10 serve to switch over between writing to "VPS label" and "Clock".

3.2 Reading VPS RAM

As a different read clock is required with VPS, clock generation takes place over a further phase-locked oscillator (IC 15, IC 1, L 2 and surrounding components). This switching component operates analogously to the clock generation described under TXT, except that the frequency is 5 MHz in this case (320 x f_H). Column counter IC 2, D flip-flop IC 12 and shift register IC 11 are clocked over demultiplexer IC 3. The demultiplexers on IC 10 are in read mode (lower switch position). Column counter IC 2 addressed RAM IC 5 and the data read out are taken over into shift register IC 11. The serial data stream at the output of shift register IC 11, pin 8 arrives at the output stages of the TXT/VPS module over AND gate IC 14, pin 6 and resistor R 40. (See section 2. "TXT" for a description of the output stages).

4. Function of the soldering straps

If a 512 kB EPROM is to be built in instead of a 256 kB EPROM, soldering strap 2 must be closed. Soldering strap 3 can be opened for test purposes and connected to other address signals. Soldering strap 1 must be connected as illustrated in the circuit diagram.

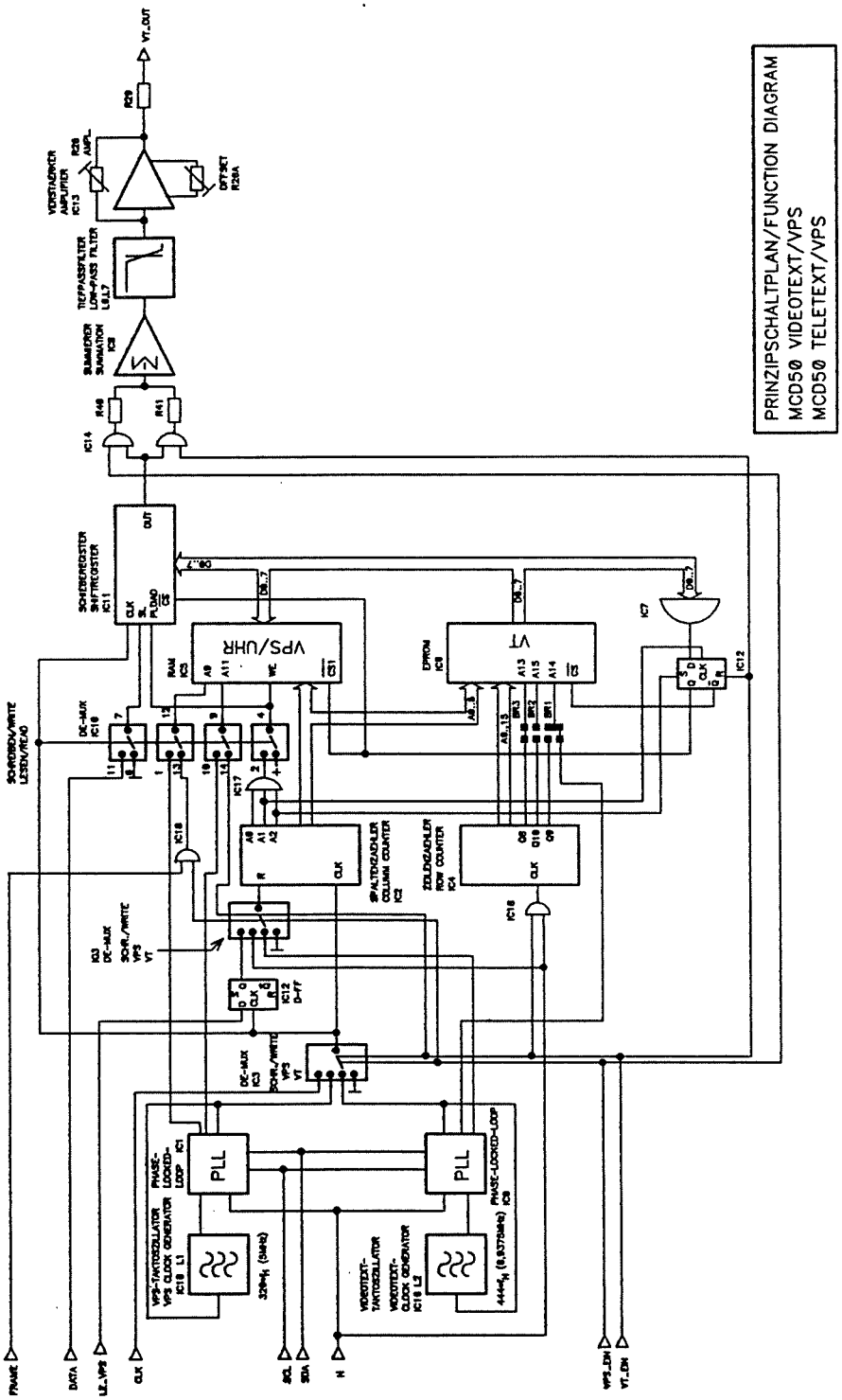

GRUNDIG electronic

Functional description

MCC 51 Secam color module (option)

1. Principle
2. SECAM coder
3. SECAM control generator

1. Principle

The color difference signals R-Y and B-Y are not transferred simultaneously as with the PAL and NTSC systems, but alternately line by line. SECAM operates with frequency modulation in place of the quadrature modulation which is generally used with PAL and NTSC. The essential levels of the SECAM module are realized in 2 special integrated circuits.

2. SECAM coder

The two color difference signals are present at plug pins s 830 13 A and S 830 11 A. They arrive at the SECAM encoder IC over transistors T 1 and T 2. The amplitude of the B-Y signal can be adjusted using control R 8. The color difference signals present at IC 2, pin 8 and pin 10 are switched over at every line. The signal thus obtained leaves IC 2 at pin 6 and passes through pre-emphasis (raising of high frequencies) C 36, R 22 and R 15 which is usual with FM systems. From a certain frequency on, low pass L 6, L 7 becomes effective and this yields the requisite total frequency response. T 4 amplifies the signal and the amplitude U + V can be adjusted using R 40. The impedance converter links the signal at low resistance to the Secam coder IC, pin 5. The range limitation takes place in IC 2 (Secam coder IC) and the frequency modulation of the color signal with the color carrier. Line R-Y is modulated with a frequency of 4.40625 MHz and line B-Y with 4.25 MHz. These mid-frequencies (centre frequencies) can be adjusted using controls R 52 (red line D_R: 4.40625 MHz) and R 51 (blue line D_B: 4.25 MHz). The frequency-modulated color signal leaves the Secam coder IC at pin 23 and is applied to transistor T 6. Oscillating circuit L 8, L 9, C 63, C 66, C 67 serves as an amitter resistance for this transistor. This so-called bell curve suppresses the carrier frequency and acts as a high pass (= HF pre-emphasis) for the sidebands. L9 adjusts the frequency and R 39 the quality of the bell curve. L 8 is adjusted to the maximum suppression of the 1st harmonic wave (ca. 8.48 MHz). Oscillation circuit L 10, C 71, C 74 is located in the collector circuit and the high degree of attenuation caused by R 45, R 49 and R 50 gives rise to a bandpass characteristic. The chroma amplitude is adjusted using R 50. The signal tapped at the slider of this control arrives at the Secam coder IC over pin 3. The signal is amplified and leaves this IC at pin 1. Emitter follower T 7 decouples the signal at low resistance at plug pin S 830 30 B. The signal is also amplified by transistor T 6, decoupled at the band-limiting low-pass L 11, L 12, C 77 to C 90 by T 9 and amplified with the help of the discretely structured operation amplifier T 10 to T 12. The standard Secam color signal is available at plug pin ST 1 pin 1.

3. Secam control generator

The Secam specification requires that the centre frequencies of the FM modulator be a certain multiple of the line frequency. This calls for a readjustment of the oscillator in the modulation-free time (synchronous time). This is the function of the Secam control IC (IC 4). A reference signal derived from the H pulse is present at pin 13 of this IC. There are 2 oscillators in IC 4 (Secam control generator) which are connected phase and frequency-locked to the reference signal with the help of two PLL circuits (phased-locked loop). R 17, C 19, C 23 and C 24 or R 25, C 43, C 44 and C 57 constitute the two requisite loop filters (not illustrated in the circuit diagram). 2 generators are required as the two color signals are modulated up to 2 different carrier frequencies. A multiplexer connects the generated oscillations to the oscillation of the unmodulated FM signal present at pin 1. the control pulse at pin 5 simply affects the timing of the multiplexer. A control voltage determined by the deviation of the FM oscillation from the generated oscillations is obtained. The F1 band pass (pin 8,9) supplies the requisite phase shift. The control voltage present at pin 7 is freed from any occurring interference by low pass L 4, L 5, C 15, C 21 and is applied to the oscillator of FM modulator IC 2, pin 2.

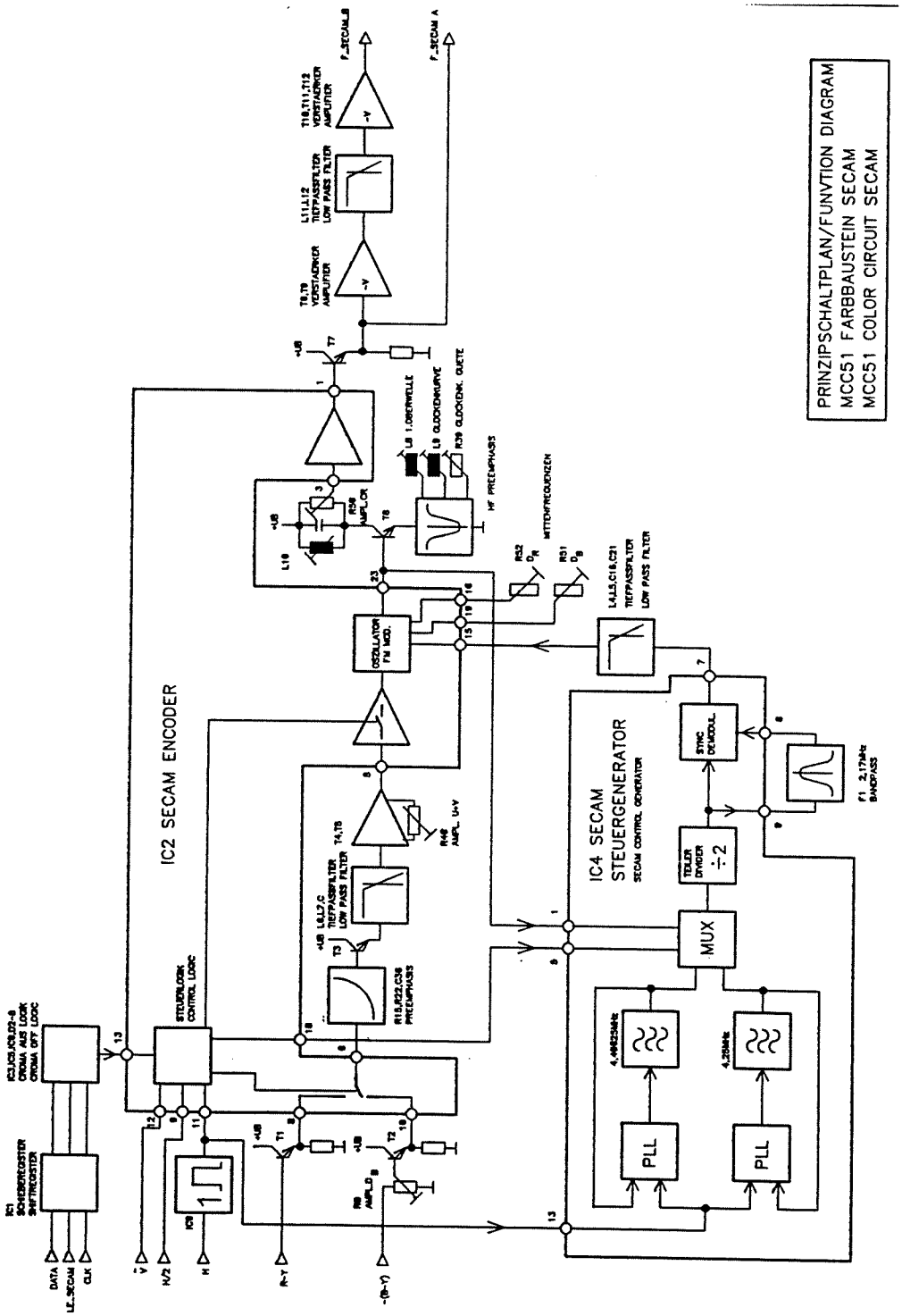

GRUNDIG electronic

Functional description MCV 52 components module (option)

1. General
2. DA converter and amplitude adjustment
2.1 Offset control
3. Control voltage generation
4. Multiburst and multipulse signal
5. Synchronous pulse generation
6. Summation and output amplifier

1. General

This module makes component signals Y(S), CB, CR, G(S), B, R and synchronous signal S available to the user. The signals arrive at the component module in digital form with the exception of the multiburst and synchronous signals. They are converted to analog form, the amplitude is adjusted electronically and they are decoupled at low resistance by the summing amplifier.

2. DA converter and amplitude adjustment

This circuit component is almost identical for signals Y, CB and CR. We will therefore confine ourselves to a description of the Y signal path.

The digital data Y__D0...9 are present at DA converter IC 400 where they are converted to an analog signal. The Y__CLK signal clocks the DA converter. A reference voltage is obtained with IC 401 whose reference point is the +5 V voltage. IC 402 adds this to the voltage adjusted with R 422 and sends the summing signal to the DA converter as a reference voltage. R 422 affects the amplitude. The analog signal present at IC 403 is limited in the rise and fall times by low pass L 100...L 103 and is supplied to multiplier IC 460 at low resistance over amplifier IC 408. The amplitude is modified in accordance with control voltage ATT__Y. The Y-M signal is available for matricizing at the output of amplifier IC 470.

2.1 Offset control

The signal tapped beore IC 407 is amplified by IC 406 and applied to sample-and-hold circuit IC 405. The voltage sampled during the H pulse charges capacitor C 427. This voltage is integrated with IC 404, R 440 and C 423 and is applied to operation amplifier IC 403 as control voltage. The Y offset is adjusted with R 441. This control also affects the the residual carrier of the multipulse. The offset control causes the signal to be 0 V during the black level. The adjustment of the multipulse amplitude takes place over control R 446.

3. Control voltage generation

Data are written serially to shift register IC 202 over the "Data" circuit. The "CLK" circuit clocks the shift register and the "LE-Komp" signal causes the IC to transmit its data to the outputs. The data are written to the 4-fold DA converter IC 103 over connections SCL and SDA. The DC voltages obtained from the lower 3 DA converters control the amplitudes of signal Y__A, CB__A and CR__A over attenuator IC 460, IC 560 and IC 660.

4. Multiburst and multipulse signal

A reference voltage is obtained over operation amplifier IC 100 and is applied to both the 4-fold DA converter IC 103 and electronic switch IC 300, pin 5. The reference voltage switched through after PIN 4 (IC 300) is amplified by IC 104 and is available to the upper DA converter of IC 103 as a reference. This voltage can be adjusted using R 118, which gives rise to an amplitude adjustment of the multiburst signal. Electronic switch IC 300 is activated at ITS 18 and the voltage divided between R 114, R 113 is now available. This causes the amplitude of the multiburst signal to decrease from 100% to 60%. The voltage present at IC 300, pin 12 is switched through to pin 14 and controls the amplitude of the multiburst signal using multiplier IC 301. IC 312 amplifies the multiburst signal and the signal is delayed by 3 ns by means of all-pass L 300, L 301 and the surrounding capacitors. The 3 ns delay ensures that the modulated burst and the Y-signal arrive at the summation point simultaneously. The multiburst signal is available for further processing via amplifiers IC 340, 350 and 360. Amplifiers 340, 350 and 360 contain a control input which can be used if required to switch off the multiburst signal.

If a "multipulse" test pattern is selected, analog switch IC 300 switches from pin 12 to pin 13. The multiburst is now amplitude-modulated by the Y__MP signal. The multipulse signal generated is treated in the same way as the multiburst signal.

5. Synchronous pulse generation

The voltage derived from reference voltage E_{ref} over R 203 is switched further by IC 200 and amplified by IC 202. The sync amplitude is adjusted by R 203. Low-pass filter L 200, L 201 and L 203 limit the rise and fall times of the pulse generated. The pulse is tapped at high resistance by IC 202, IC 820 and R 284 decouple the synchronous signal with the defined impedance of 75 Ω. After low pass L 200, 201 and L 203, the S signal is applied to an electronic switch. This is activated by NTSC, i.e. in this operating mode the S amplitude is reduced from 300 mV_{pp} to 286 mV_{pp} (R 214, R 215). The S signal can be switched off with a further analog switch. IC 230 amplifies the signal and transmits it to the matricizing amplifier.

6. Summation and output amplifier

The CB__A and CR__A signals arrive at amplifier IC 580 over resistors R 574, R 575 and R 577. The CR signal is obtained by summation. The component signals are also generated by a summation of the individual signals with the help of operation amplifier IC 840 - IC 890 and the relevant resistors (see principle circuit diagram). The component signals are decoupled with a defined impedance of 75 Ω by resistors R 846, 855, 865, 877, 886 and R 824.

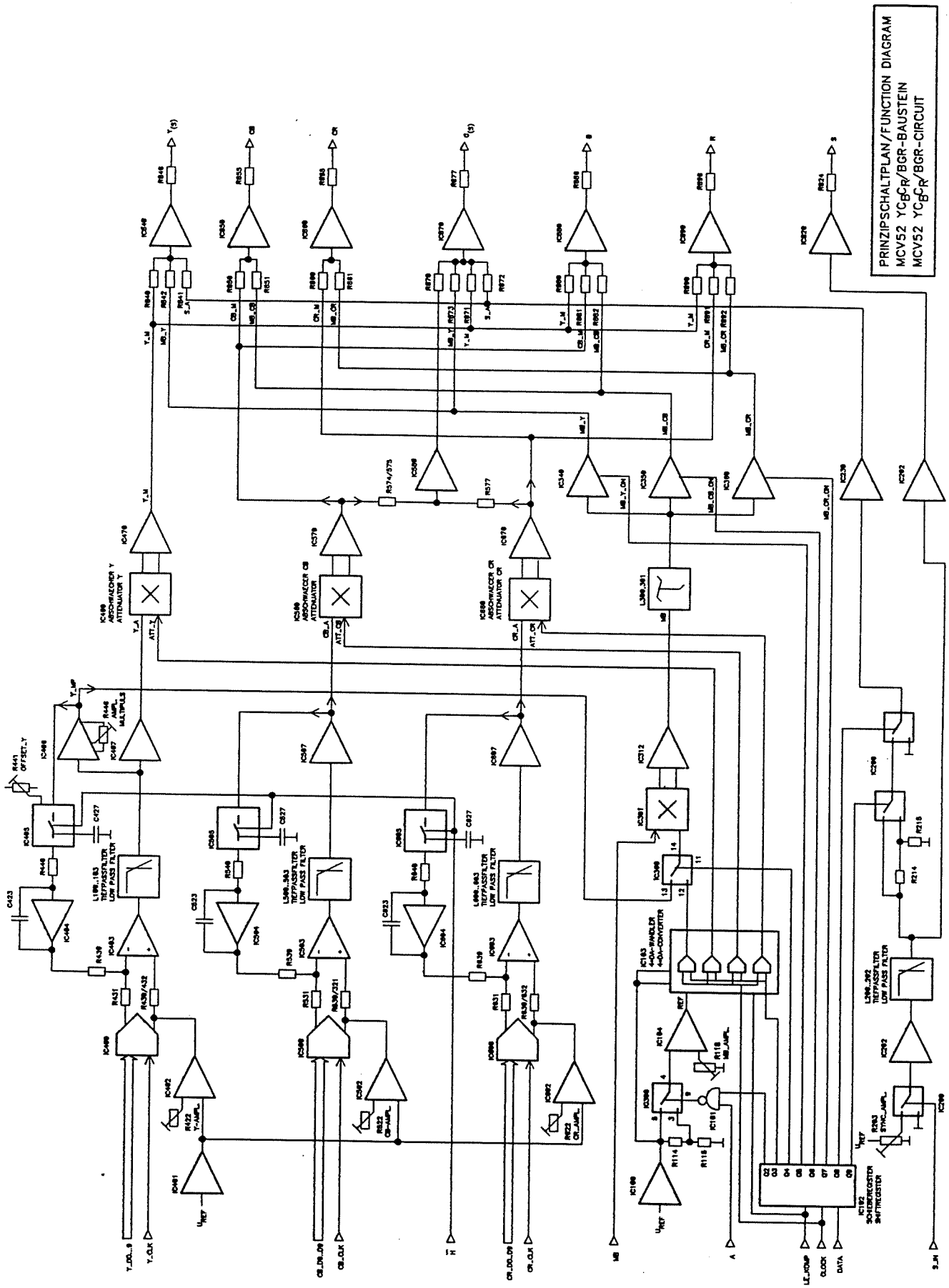

GRUNDIG electronic

Functional description
MCI 52 IEEE 488 module (option)

The fixed programmed microprocessor IC 1 (UPD 7210) is located on this module. This IC controls the complete data traffic.

If data are to be output to an external device, the data present at St 1 are transmitted to circuit driver IC 2 (75160) and resistors R 4 to R 20 terminate the data circuits. Once the data are received by an external device, data traffic in the opposite direction starts up. Control takes place over IC 3 (75161). Resistors R 21 to R 36 terminate these circuits. If required IC 1 outputs an interrupt signal over pin 11.

Functional description
MCD 51 digital parallel interface (option)

1. General
2. Y, CR, CB signal processing
3. Pixel counter
4. Line counter
5. PLL

1. General

This module makes the video signal available to the user in digital parallel form as is proposed in Recommendation 601 of the CCIR (Comité Consultatif International des Radiocommunications). Signals Y, U and V, which are already present in the device in digital form, are interleaved in a multiplexing procedure, decoded and transferred to the output socket at ECL level. The Y signal is sampled twice as often as the CR or CB signal (4:2:2 procedure). A digital synchronous word is generated during the H and V blanking and if necessary additional information is transferred.

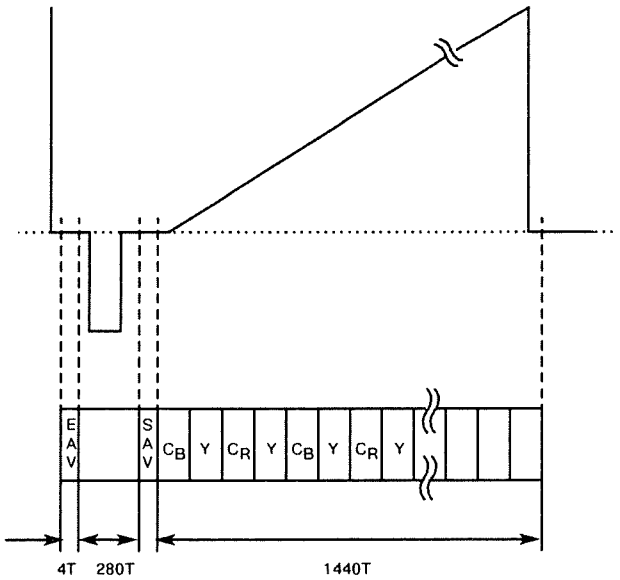

$$T = \frac{1}{27\ \text{MHz}} = 37\ \text{ns}$$

2. Y, CR, CB signal processing

Y data Y0...9 in GALs (Generic array logic) IC 3 to IC 7 are switched through during the visible line section. The digital color information CB0...9 and CR0...9 is multiplexed by 13.5 MHz. As the CR signal is switched further after the CB signal, the CR signal must be buffered by one clock period (13.5 MHz). The changeover is controlled by the decoder which is built into the GALs (in accordance with CM0...2 control signals). There are also latches in the GALs which ensure a precise and simultaneous switching through of the multiplexed data. Five of these modules (IC 3 to IC 7) are required to process a 10-bit data stream. EPROMs IC 10 to IC 13 encode Y signals YMUX 0 to 9 or chroma signals CMUX 0 to 9. Y data YCOD 0...9 are buffered by latches IC 12 and IC 13. The Y or CH data are switched further depending on the control signals at the OE and CLK inputs of the latches and the OE control signal at EPROMs IC 10 and 11. The resistor networks R 60 to R 105 convert the TTl level to ECL level. Any time differences arising are compensated by the ECL latches IC 14 to IC 18. These latches are clocked with 27 MHz. The standard signal is available at the 25-pin SUB-D socket.

3. Pixel counter

This circuit component is required to generate the digital synchronous words during H and V blanking. Multiplexers IC 3 to IC 7 therefore pass on the output signals of the pixel counter. The pixel counter is realized with IC 105, 74HC163 and IC 107, GAL 22V10 which is programmed as a counter. The pixel counter can be preset to certain start conditions over load inputs A, B, C and D (IC 105) in accordance with the standard selector switch (525 lines or 625 lines). An accept pulse derived from the H pulse is present at LD (IC 105) and I7 (IC 107).

Data (from the P module) are written to shift register IC 108 and are passed on to latch IC 109 with the help of the DATA, LE__601 and CLK signals. The data in latch IC 109 are passed on by the clock signal derived from the FRAME pulse. Outputs Q4 to Q7 function as control signals for pixel counter IC 107. With the help of these control signals (CM0 to CM2) individual components (Y, CB, CR) can be switched off in multiplexers IC 3 to IC 7 or errors can be deliberately written into the synchronous words. Signal CP13.5 clocks the pixel counter at 13.5 MHz.

4. Line counter

Line counter IC 103 and line decoder IC 104 determine which synchronous word is output from coder IC 8 to IC 11. They also carry out the block selection of the coder IC i.e. they determine whether the input data present (Y, CB, CR) should be multiplexed or whether test patterns stored in the EPROMs (e.g. multiburst) should be passed on. The transmission of the current line number is also possible.

Decoder IC 100, IC 101 and IC 102 supplies the reset pulse for the line counter in line 1 of the frame and a further pulse to IC 102, pin 1 in order to load pixel counter IC 105 and IC 107 at the start of the H pulse. Line counter IC 103, pin 10 is clocked by a pulse coming from pixel counter IC 107, pin 23. This pulse appears twice in each line. Output Z__6 of the line counter arrives at the D input of flip-flop IC 100. The flip-flop is clocked by the FRAME pulse. Output Q or /Q thus changes its status in accordance with the standard selected (525 lines or 625 lines).

The output signals of line counter Z__0 to Z__9 are momentarily passed on by multiplexers IC 3 to IC 7 during H blanking for the line number fade-in.

In addition to the output signals of the line counter, output signals Q0 to Q3 of latch IC 109 are present as addresses at EPROM IC 104. In this way various sto-

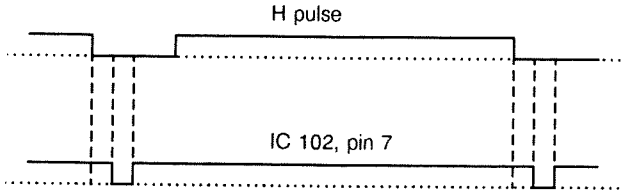

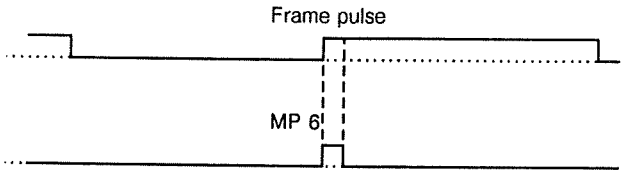

red test patterns can be called up. The EPROM decodes the input signals and passes them on to multiplexers IC 3 to IC 7 over latch IC 106 which is clocked at line frequency (RS0 to RS4). Signals RS0 to RS4 appear as SMUX0 to SMUX4 at the output of multiplexer IC 3 to IC 7 and control the block and synchronous word selection in coder IC 10 to IC 13.

5. PLL

A clock of 27 MHz is necessary for the ECL latches. This clock is generated by a phase-locked loop (PLL). A voltage-controlled oscillator (VCO) oscillates at a frequency of 54 MHz (T 1 and surrounding components). R 110 and R 111 carry out the level adjustment to ECL frequency divider IC 19. The 27 MHz oscillation is available at IC pin 2 and pin 3. The clock is passed on to the output socket over pin 14 and pin 15. IC 21 divides the 27 MHz oscillation making available a clock signal of 13.5 MHz. Comparator IC 20 compares this signal with the reference signal (CP-13.5 signal) and supplies a control voltage to pin 13 in accordance with the frequency and phase shifts of these signals. This control voltage is smoothed with loop filter R 54, R 55 and C 25 and is applied to the VCO as a tuning voltage.

The built-in voltage converter IC 24 supplies the requisite -5 V for the ECL modules.

PRINZIPSCHALTPLAN/FUNKTION DIAGRAM
MCD51 DIGIT. PARALLEL SCHNITTSTELLE
MCD51 DIGIT. PARALLEL INTERFACE

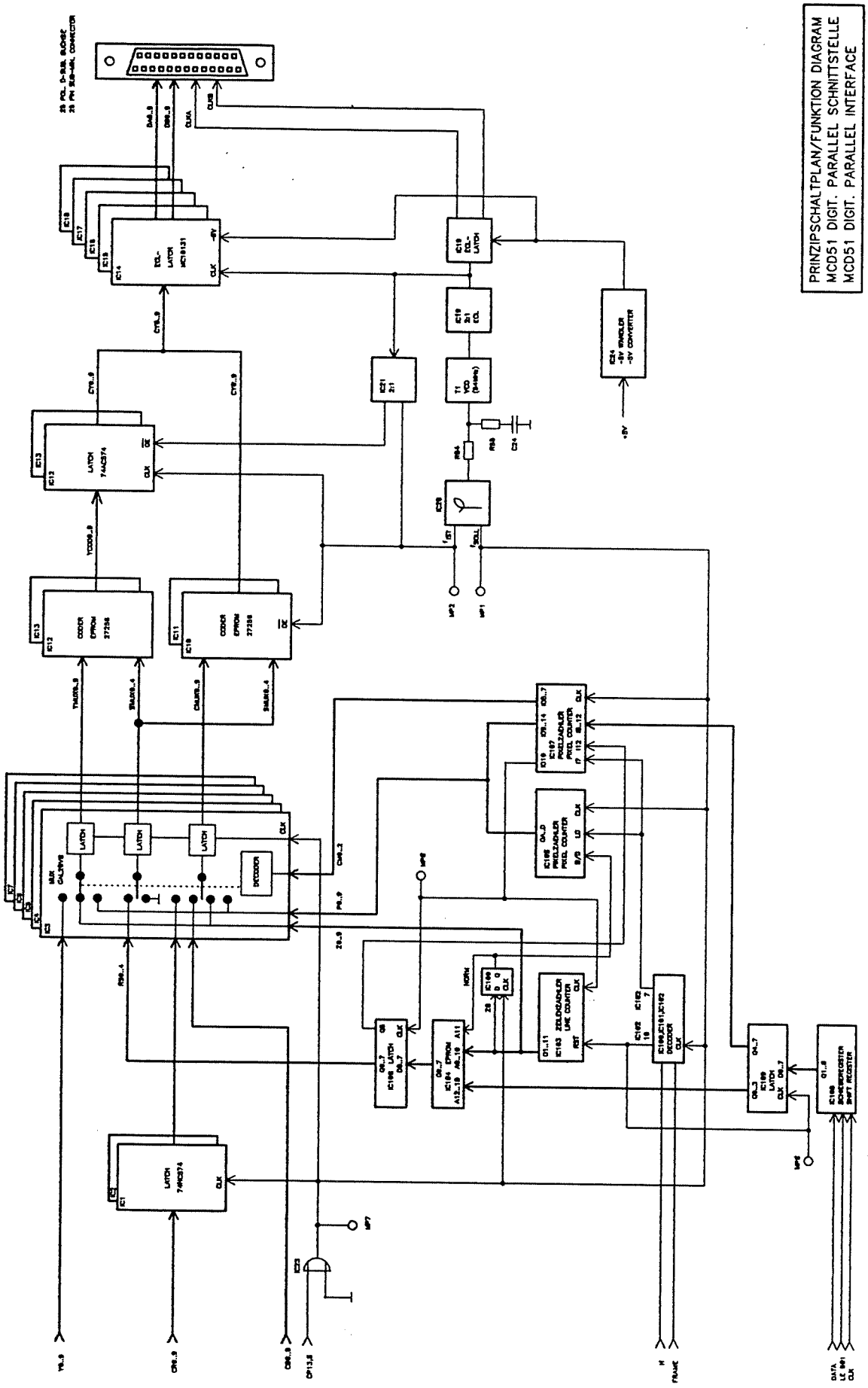

GRUNDIG electronic

Professional Video Generator VG 1100

OTHER

GRUNDIG
electronic